BIO-CEL® EASY

Assembly Instruction

BIO-CEL® EASY is a small but mighty MBR system built for customers whose water treatment needs fall into the 10 – 100 m3/d 'sweet spot' for the modules. This simple and efficient MBR module is easy to design, assemble, connect, move, and expand in any customer facility. The BIO-CEL® EASY module fits perfectly in the filtration tank: BIO-CEL® EASY TANK. The perfect pair of tank and module(s) ensures a plug-and-play experience.

ABOUT THIS DOCUMENT

This document describes the general approach for the assembly of BIO-CEL® EASY. Before starting to assemble the module, please read this document carefully.

Make sure all parts and tools are available for module assembly. You need to be 2 persons for the assembly.

SAFETY INSTRUCTIONS – LISTED ON PACKAGING

To transport and temporarily store the module before installation, please consider the safety instructions listed below. These instructions are also listed on the packaging.

Do not damage outer packaging.

Handle the product with care.

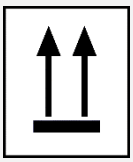

Store packaging upright with arrows directed upwards.

Protect from moisture (< 70 % ambient humidity).

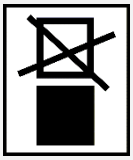

Do not stack the modules.

Protect from direct sunlight.

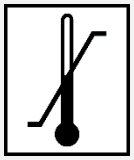

Store preserved modules in the following temperature range only.
5°C - 40°C (41°F - 104°F).

MICRODYNNADIR
A MANN+HUMMEL Company

Step 1: Components check

- Along with the membrane stacks and the frame parts, the below parts are included. Please check if all parts are delivered.

List of Components		
No.	Description	Amount
1	Support tubes	4
2	Lock plate	4
3	Nut 1 ½”	16
4	Spring Washer	6
5	Interconnector	1
6	M8 Allen screw	4
7	M8 lock nut	4
8	¾” blind plug	1
9	O-ring 47(3x2, 62x52, 54)	8
10	O-ring 21(89x2, 62x27, 13)	8
11	Rubber spacer	2
12	Spacer L = 21.5 mm	4
13	Spacer L = 34 mm	4
14	Spacer L = 9.5 mm	4
15	Aerator	4
16	Counter holder	1
17	Air manifold	1
18	Lubricant	1

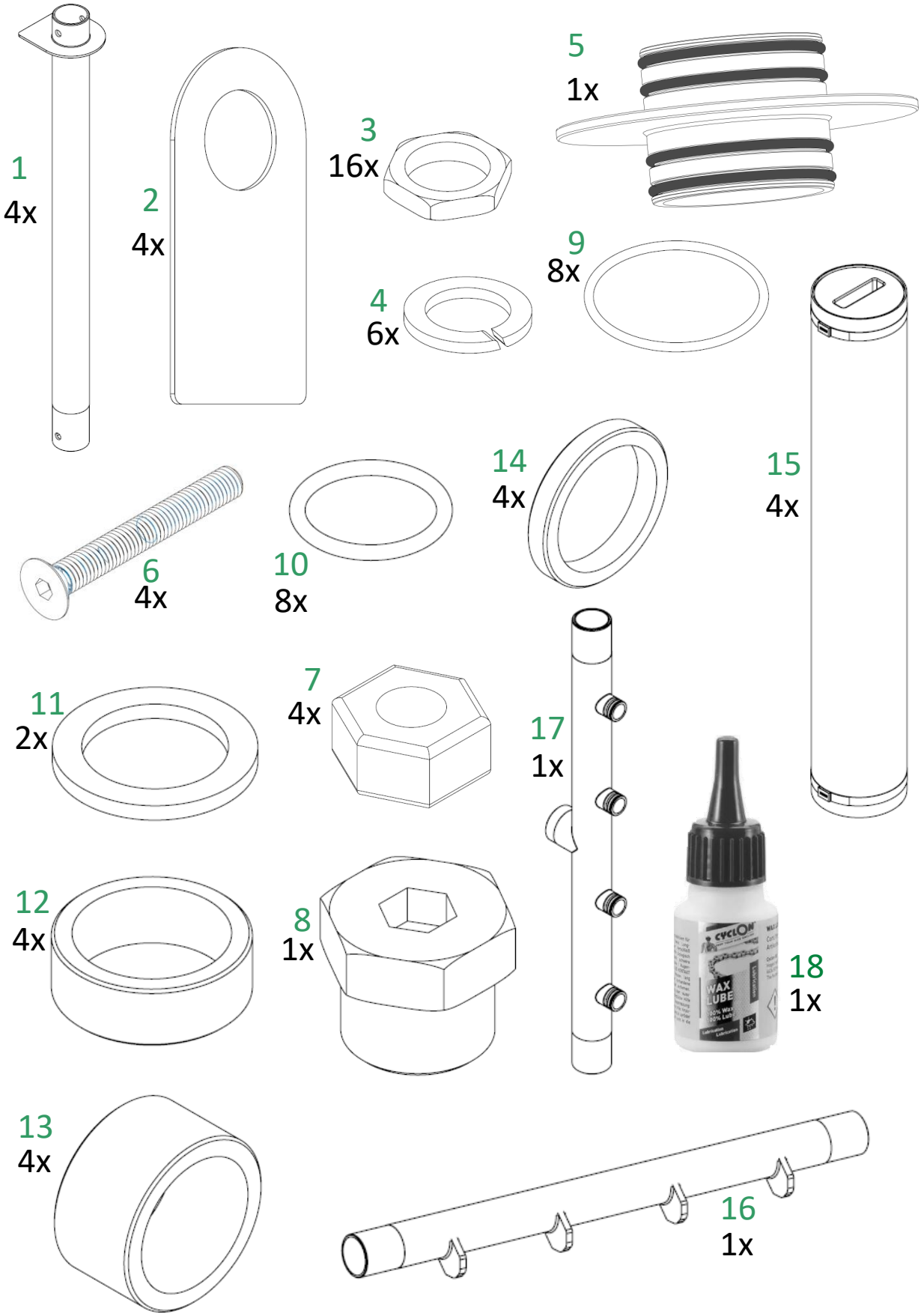

MICRODYNNADIR
A MANN+HUMMEL Company

Step 2: Required tools

- Please get these tools which helps in tightening and loosening the model.

Required tools for setup:

1. 13 mm wring wrench
2. 5 mm Allen key
3. 12 mm Allen key
4. Open-End wrench 55mm
5. Pipe Wrench (optional, if Open-End wrench is not available)

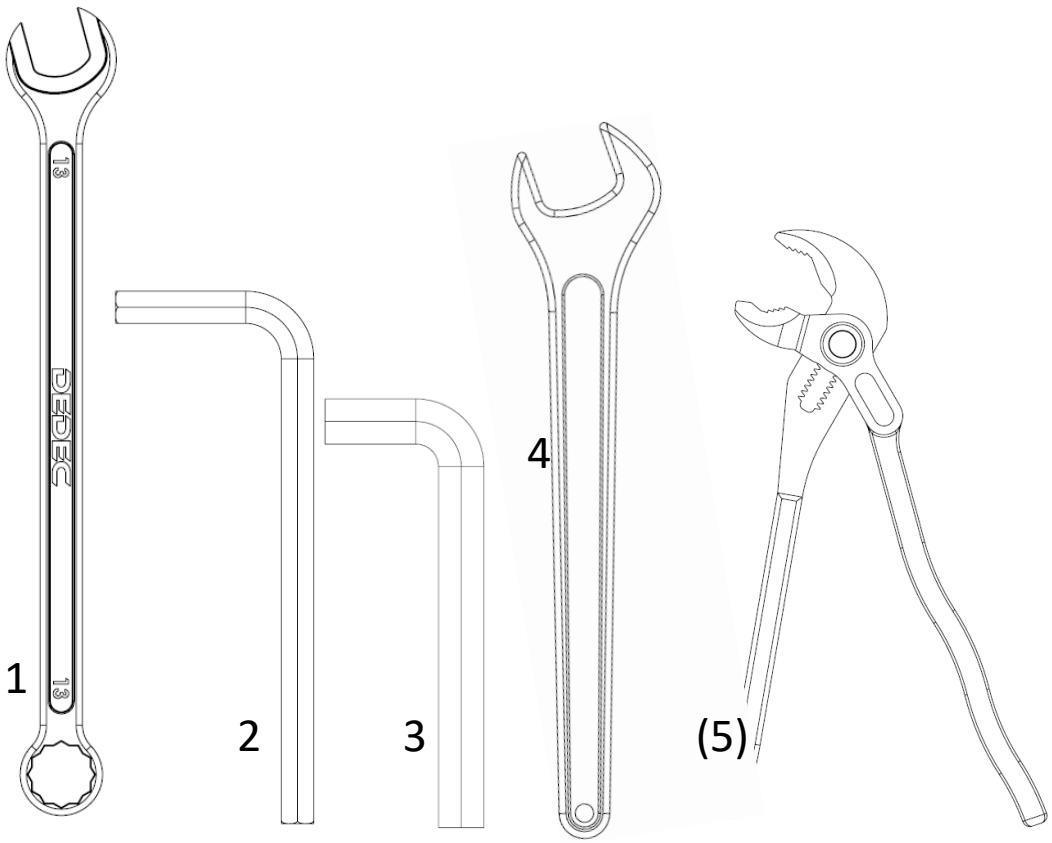

MICRODYNNADIR
A MANN+HUMMEL Company

Step 3: Prepare the first frontal plate

- Place the plate on a flat surface with permeate connector facing upwards.
- Both frontal plates provided are identical, therefore any of them can be picked.

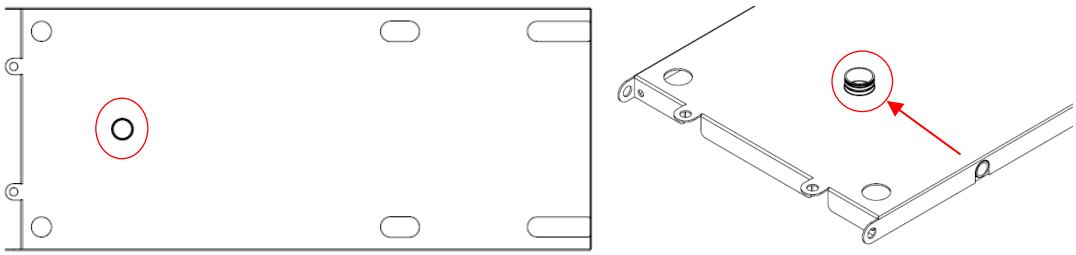

Step 4: Install the rubber spacer on the frontal plate

- Push the spacer onto the permeate connector until it is in contact with the plate.

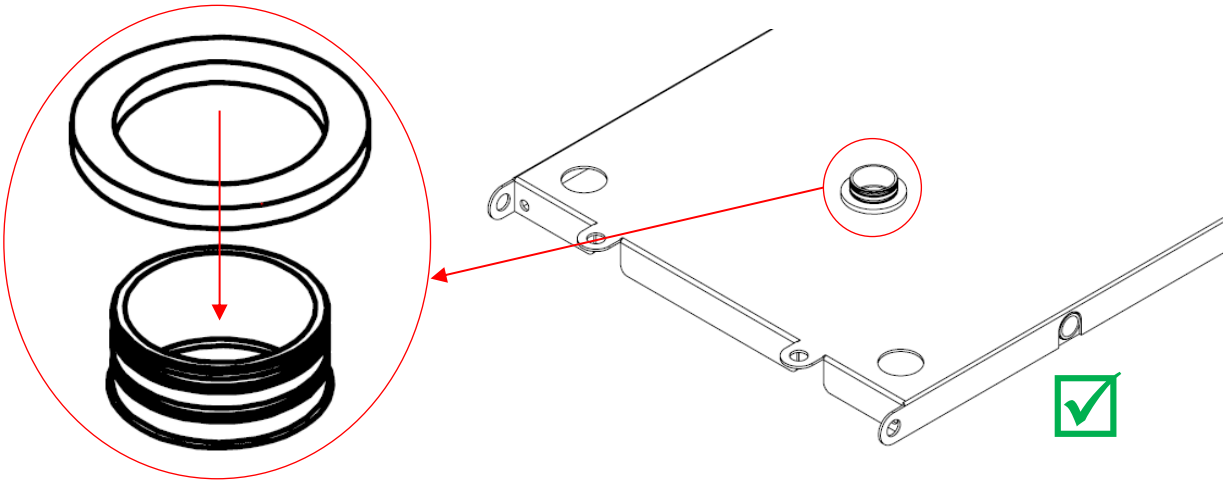

MICRODYNNADIR
A MANN+HUMMEL Company

Step 5: Install the O-rings

- Installing 2 (two) O-rings 47 very carefully so that it is not damaged.
- Carefully slide each O-ring over the permeate connector and fit it on the slot.

⚠ Attention 2 (two) O- rings must be installed.

⚠ Make sure all the seals are present on the permeate connector and correctly placed on the slot.

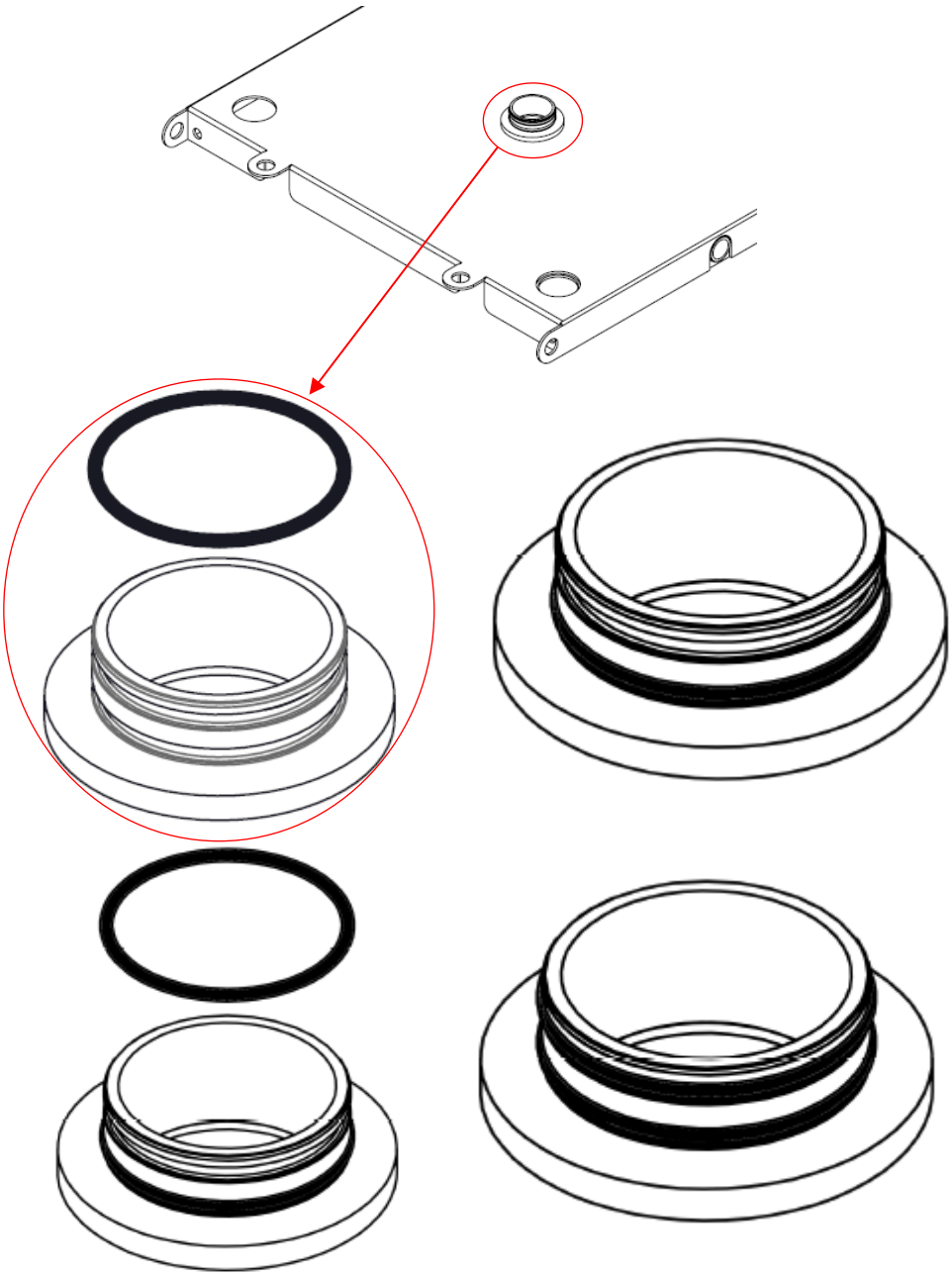

MICRODYNNADIR
A MANN+HUMMEL Company

Step 6: Lubricating O-rings present on the permeate connector

- Lubricating the O-rings present on the permeate connector to install membrane stack easily without damaging it.
- Apply lubricant around O-rings fully so that O-rings are completely lubricated.

⚠ Please make sure lubrication is applied on the 2(two) O-rings present on the permeate connector.

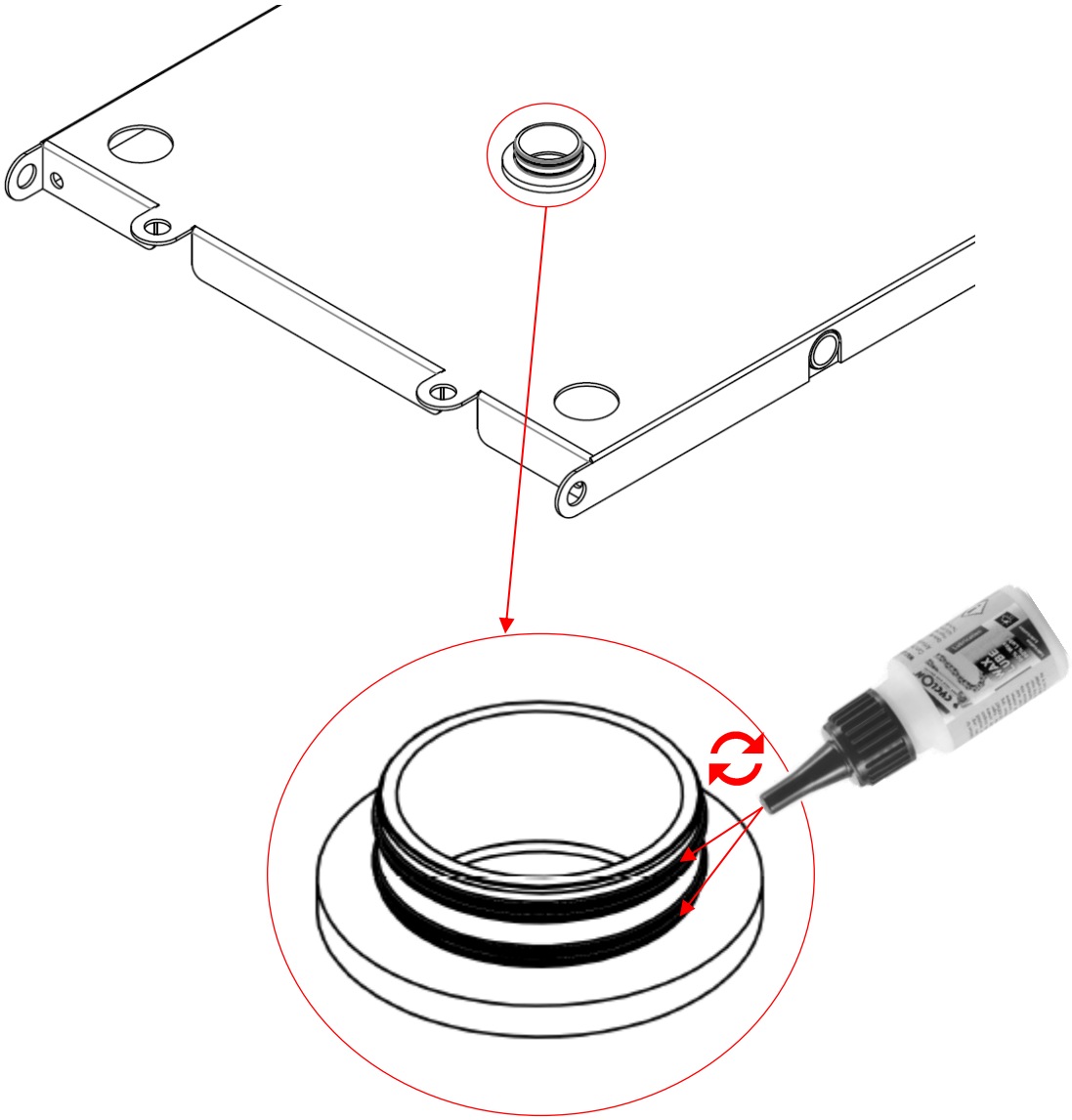

MICRODYNNADIR
A MANN+HUMMEL Company

Step 7: Install the support tubes

- Push the support tubes through the holes of the plate.
- Install four supporting tubes as shown below and place the frontal plate with supporting tubes on a flat surface.

⚠ The supporting tubes must be installed with lock plates facing outwards.

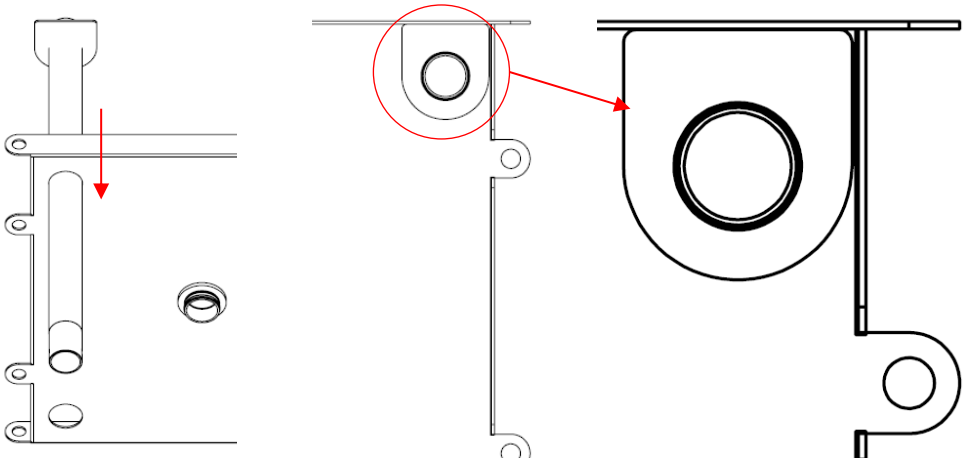

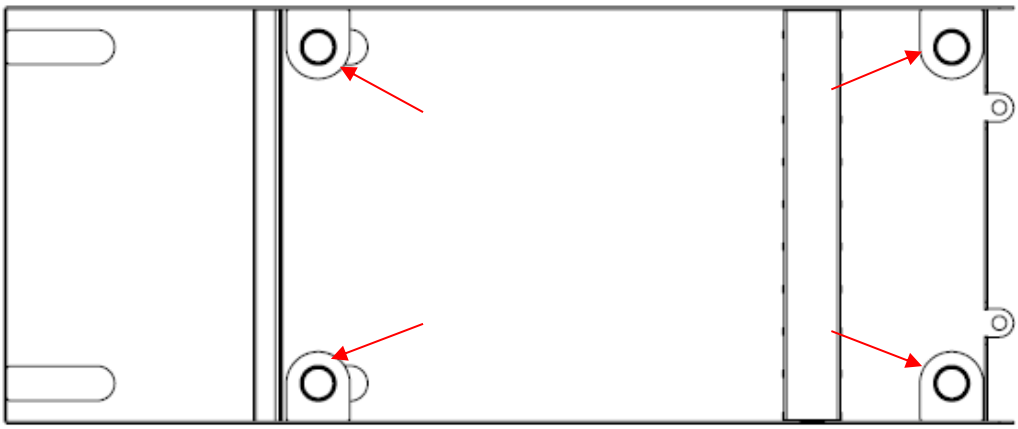

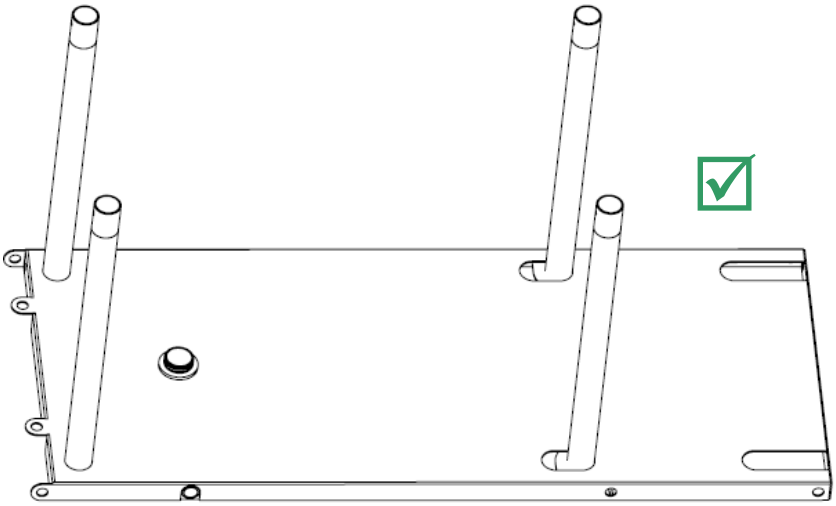

MICRODYNNADIR
A MANN+HUMMEL Company

Step 8: Install spacers

- Install one of the 21.5 mm spacers onto all four supporting tubes installed.

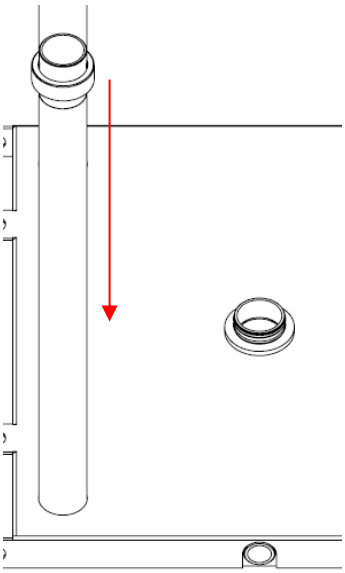

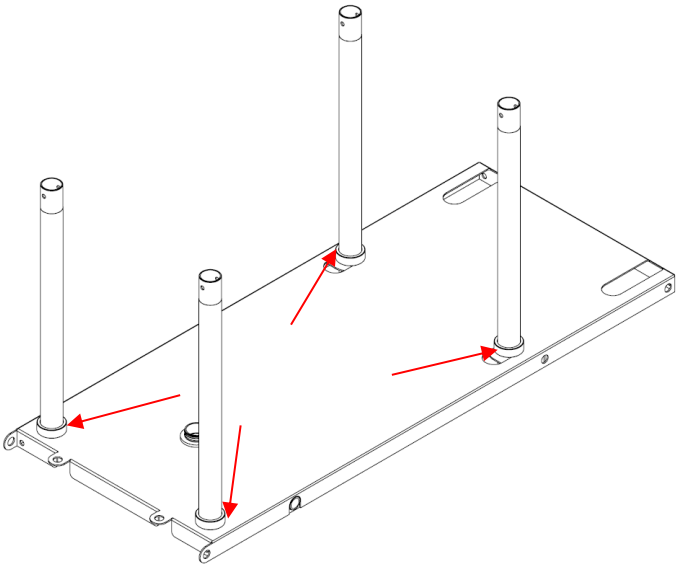

MICRODYNNADIR
A MANN+HUMMEL Company

Step 9: Unpack membrane stack

- The package must only be opened at the marked point (see picture).
- To open the cardboard box, peel off the adhesive tab at the designated point.

⚠ The cardboard box should only be opened at the marked points (see picture).

⚠ DO NOT use a knife!

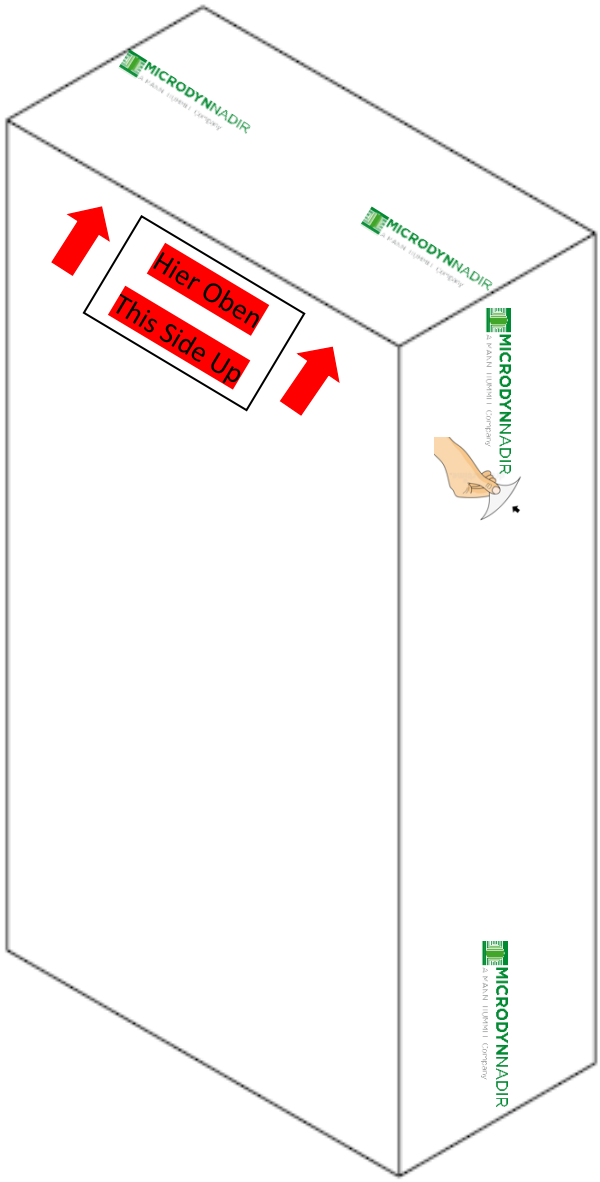

Step 10: Pull the membrane stack out of the cardboard box

- Place the opened package as shown below.
- Carefully pull the membrane stack out of the cardboard box with the help of string provided.

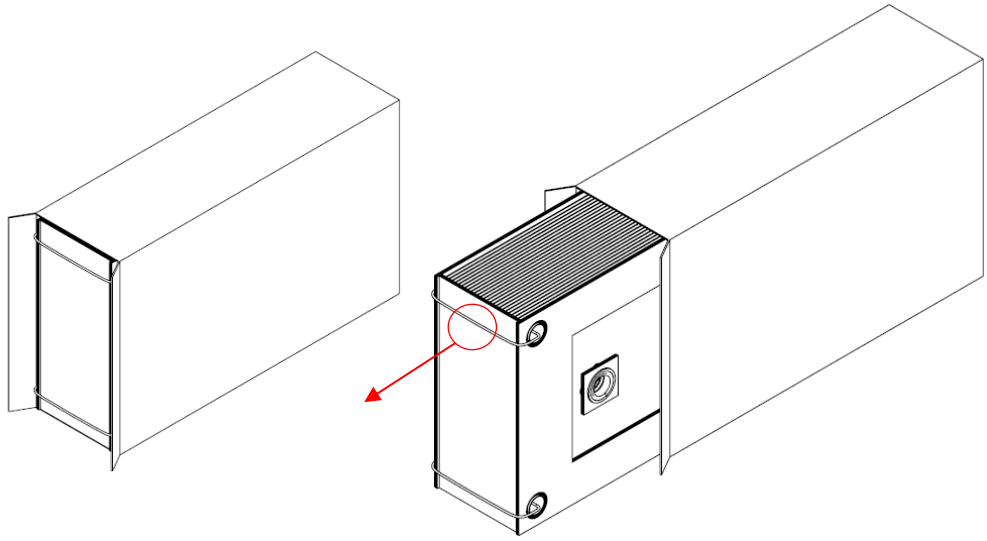

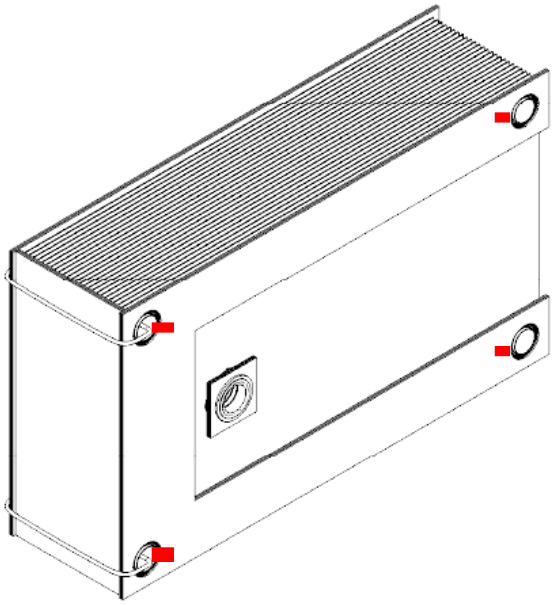

MICRODYNNADIR
A MANN+HUMMEL Company

Step 11: Remove the protective cover

- Remove the protective cover carefully from the cardboard box.

⚠ DO NOT damage the membrane stack while removing the protective cover.

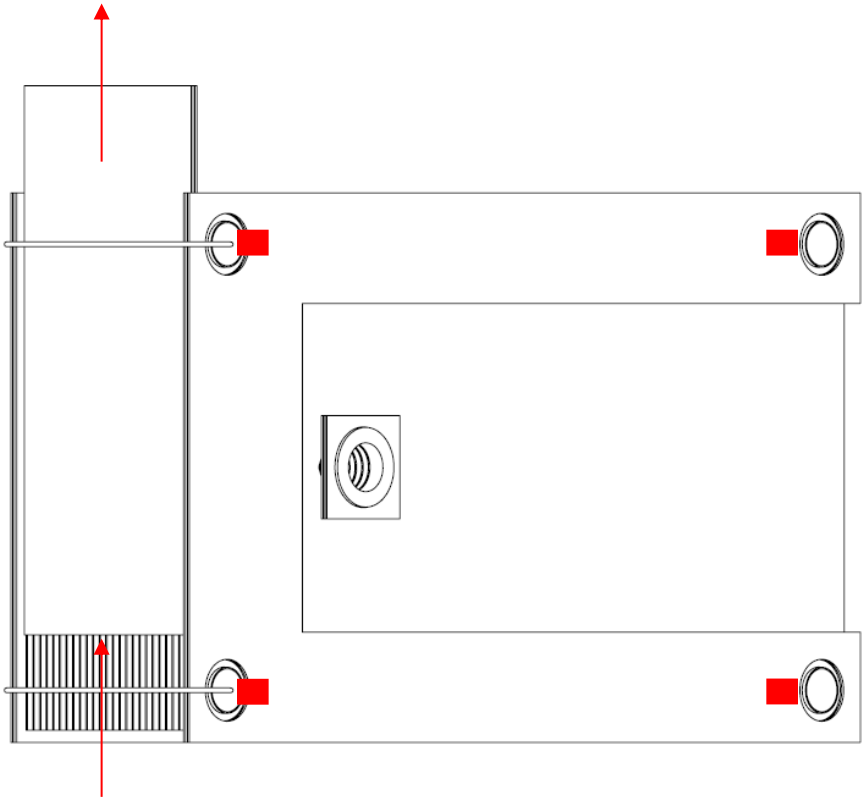

MICRODYNNADIR
A MANN+HUMMEL Company

Step 12: Remove the transport protection

- Carefully remove the protective cardboard caps from both sides of permeate suction tubes.

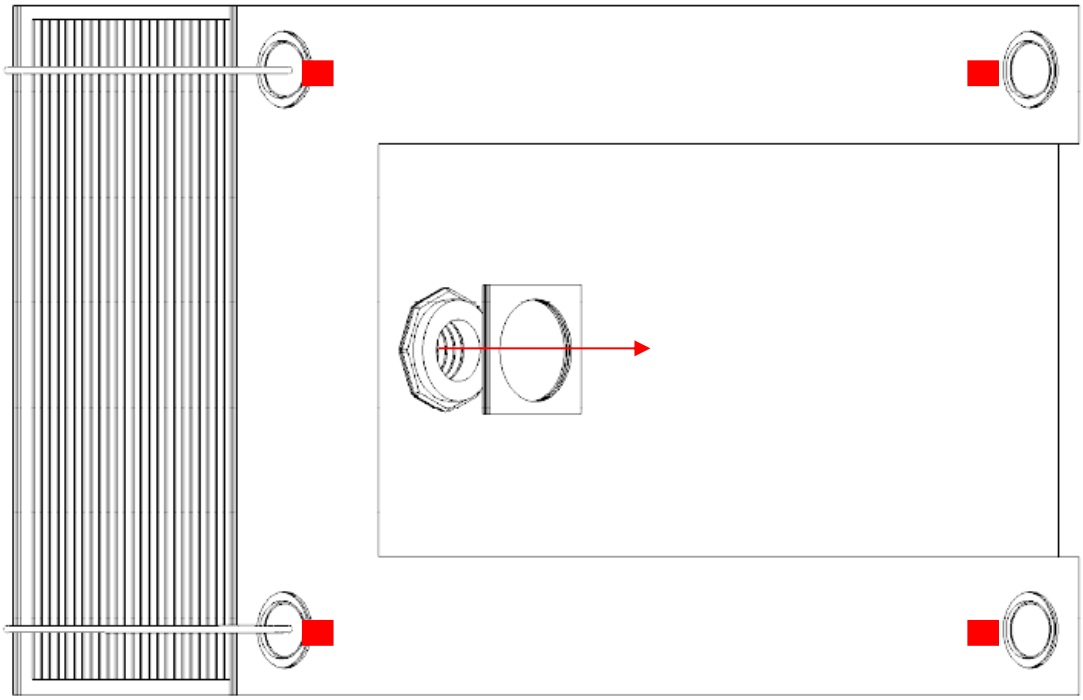

Step 13: Lay down the membrane stack

- Carefully place the membrane stack (including side cardboard pieces) on a flat and clean surface.

⚠ DO NOT damage the membrane stack while laying it down on the surface.

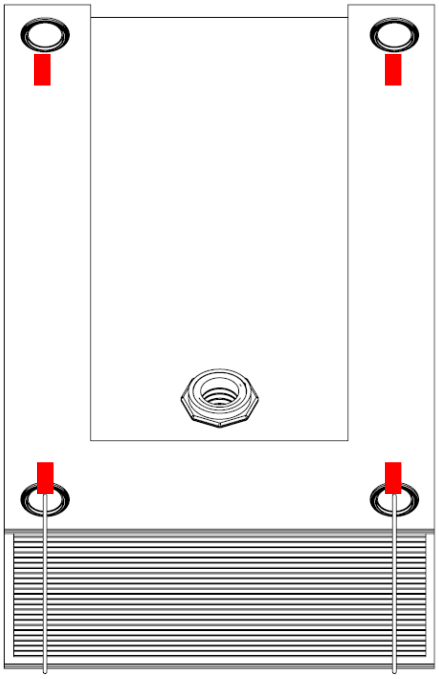

MICRODYNNADIR
A MANN+HUMMEL Company

Step 14: Remove the transport protective tape

- Remove the red adhesive strips from all four cardboard tubes.

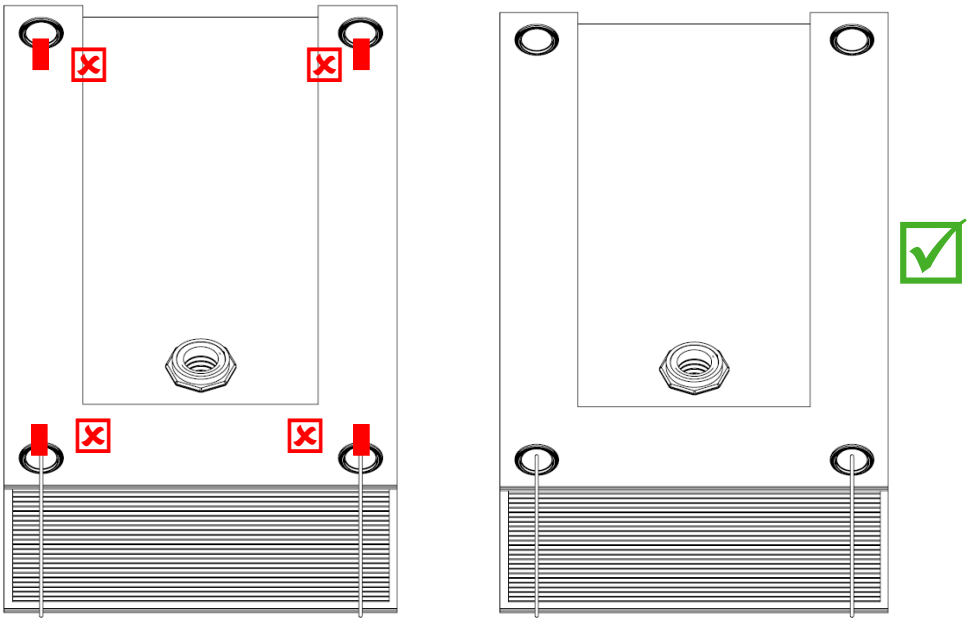

Step 15: Remove the holding strings

- Carefully cut the holding strings of both sides using scissors.

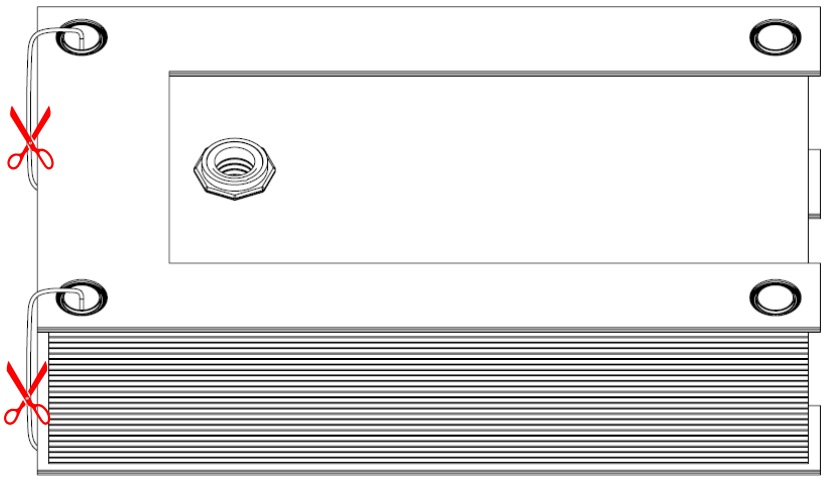

MICRODYNNADIR
A MANN+HUMMEL Company

Step 16: Remove the corrugated cardboard piece

- Carefully take off the corrugated cardboard piece from the side facing up.

⚠ DO NOT damage the membrane stack while removing the cardboard piece.

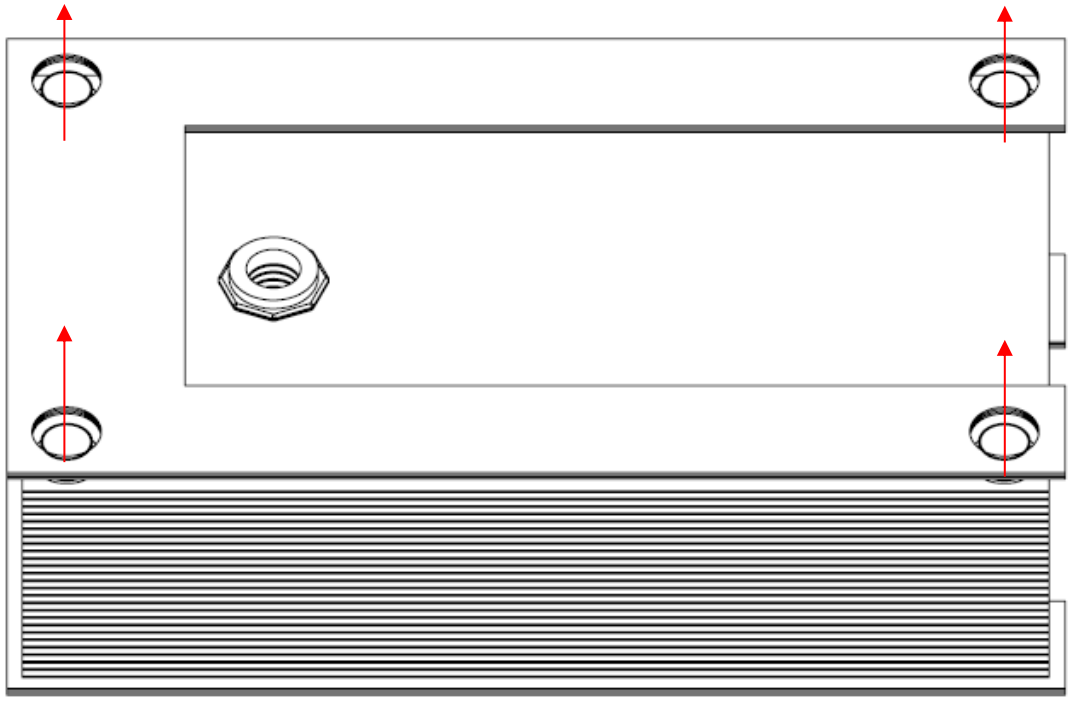

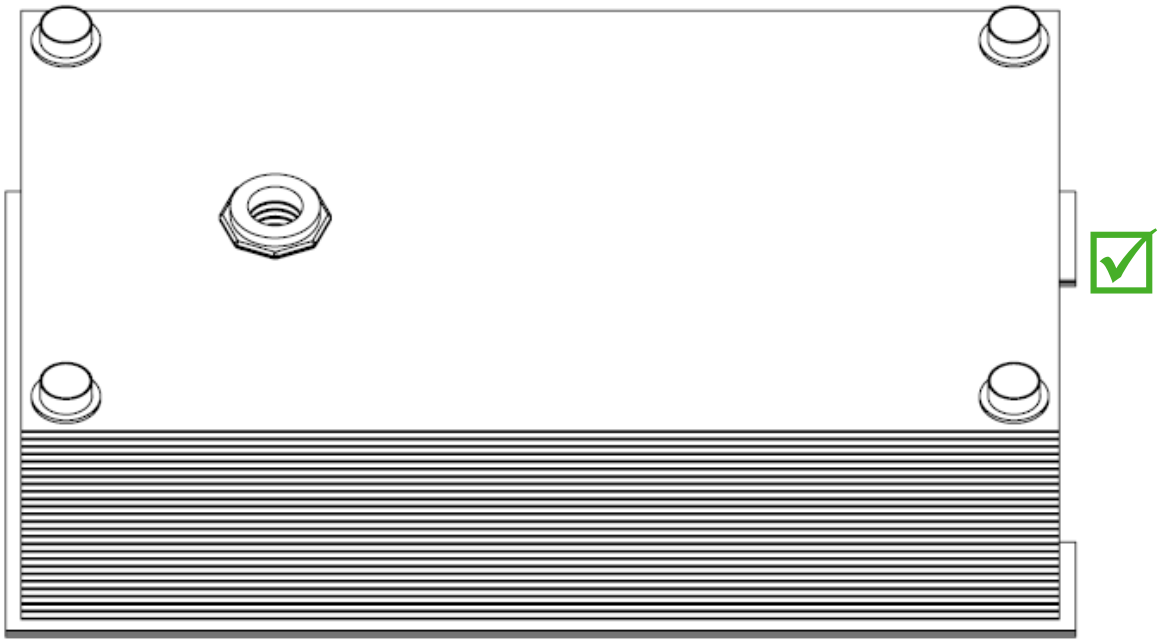

MICRODYNNADIR
A MANN+HUMMEL Company

Step 17: Remove the cardboard tubes

- Carefully remove all four cardboard tubes.

⚠ DO NOT damage the membrane stack while removing the cardboard tubes.

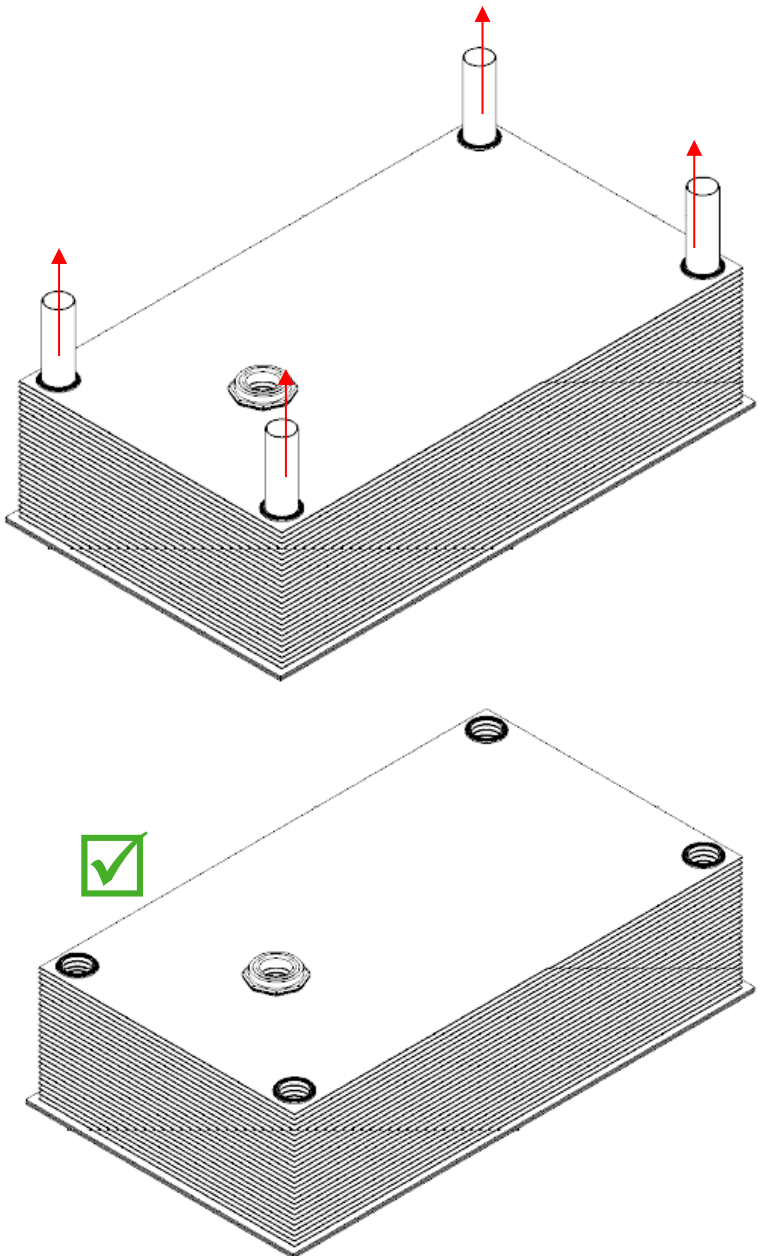

MICRODYNNADIR
A MANN+HUMMEL Company

Step 18: Lift the membrane stack

- With assistance of another person, carefully hold the stack between the plastic eyelets and corrugated board.
- Use your finger to grab the eyelets.

⚠ DO NOT damage the membrane stack while lifting it.

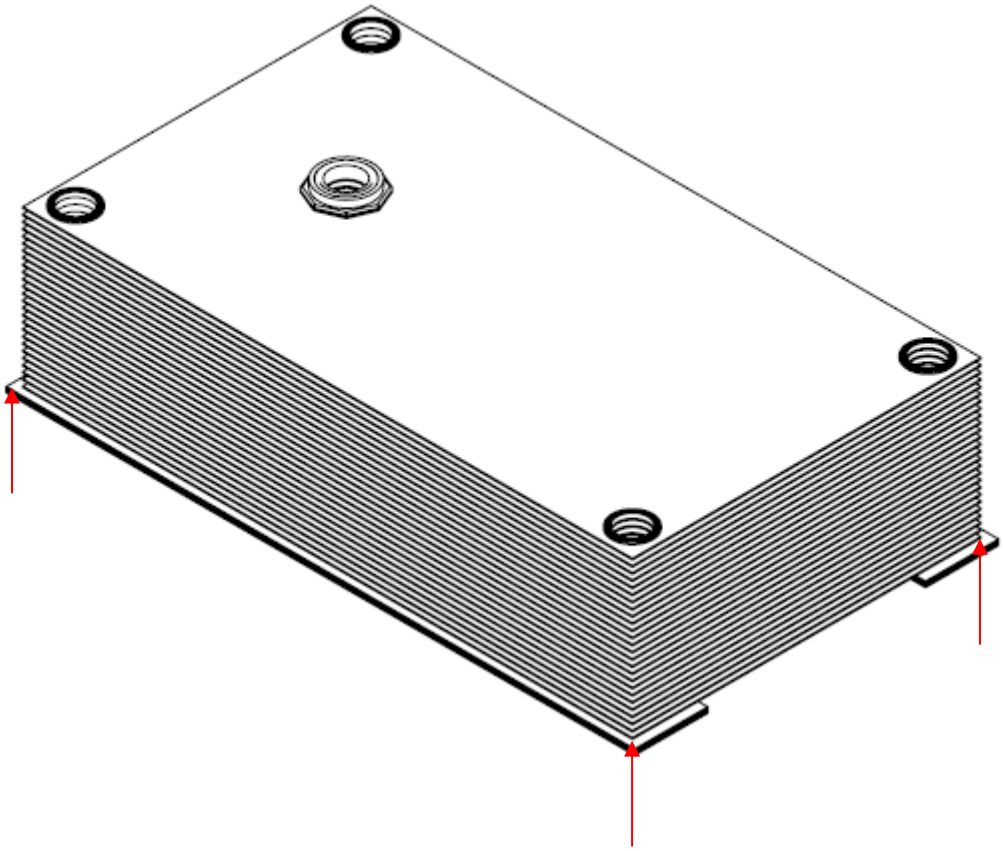

MICRODYNNADIR
A MANN+HUMMEL Company

Step 19: Install the first membrane stack

- With the assistance of another person carefully slide the membrane stack onto the supporting tubes.
- Hold the membrane stack from below at the permeate connector onto the connector's side.

⚠ The stack must be evenly pushed onto the supporting tubes (see picture).

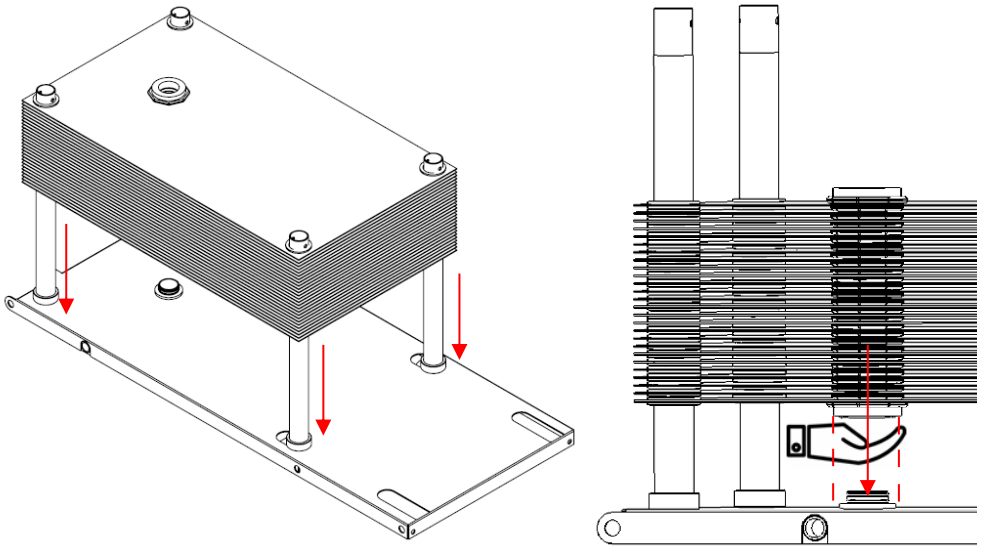

MICRODYNNADIR
A MANN+HUMMEL Company

Step 20: Install the membrane stack on the permeate connector

- Align the permeate connector of the membrane stack to the permeate connector on the frontal plate.
- Push the permeate connector of the membrane stack with slight pressure onto the permeate connector of the frontal plate.

⚠ There must be no gap between the permeate connector of the stack and one of the frontal plates.

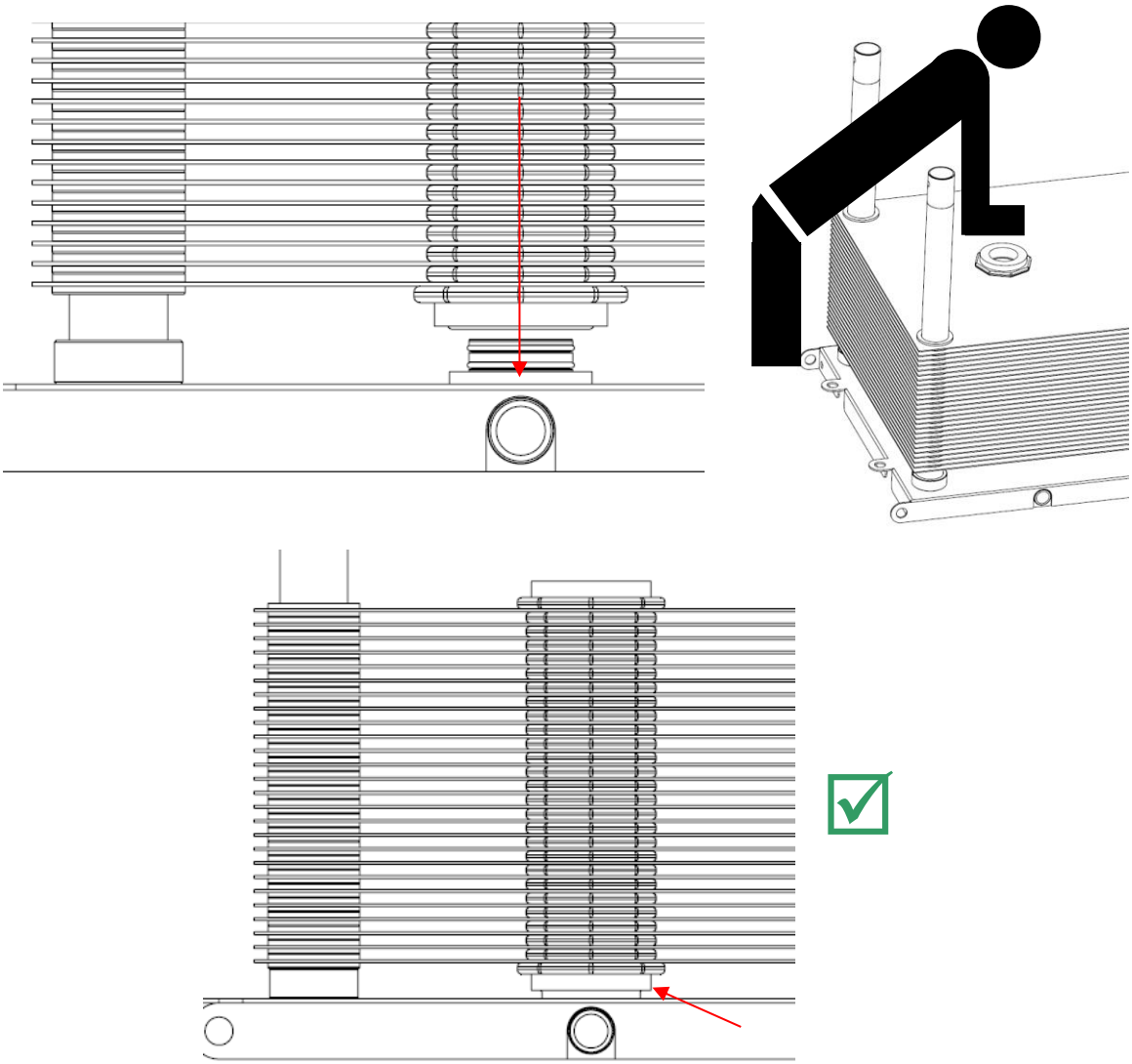

MICRODYNNADIR
A MANN+HUMMEL Company

Step 21: Install the spacers

- Slide a 34 mm spacer onto each of all four supporting tubes.

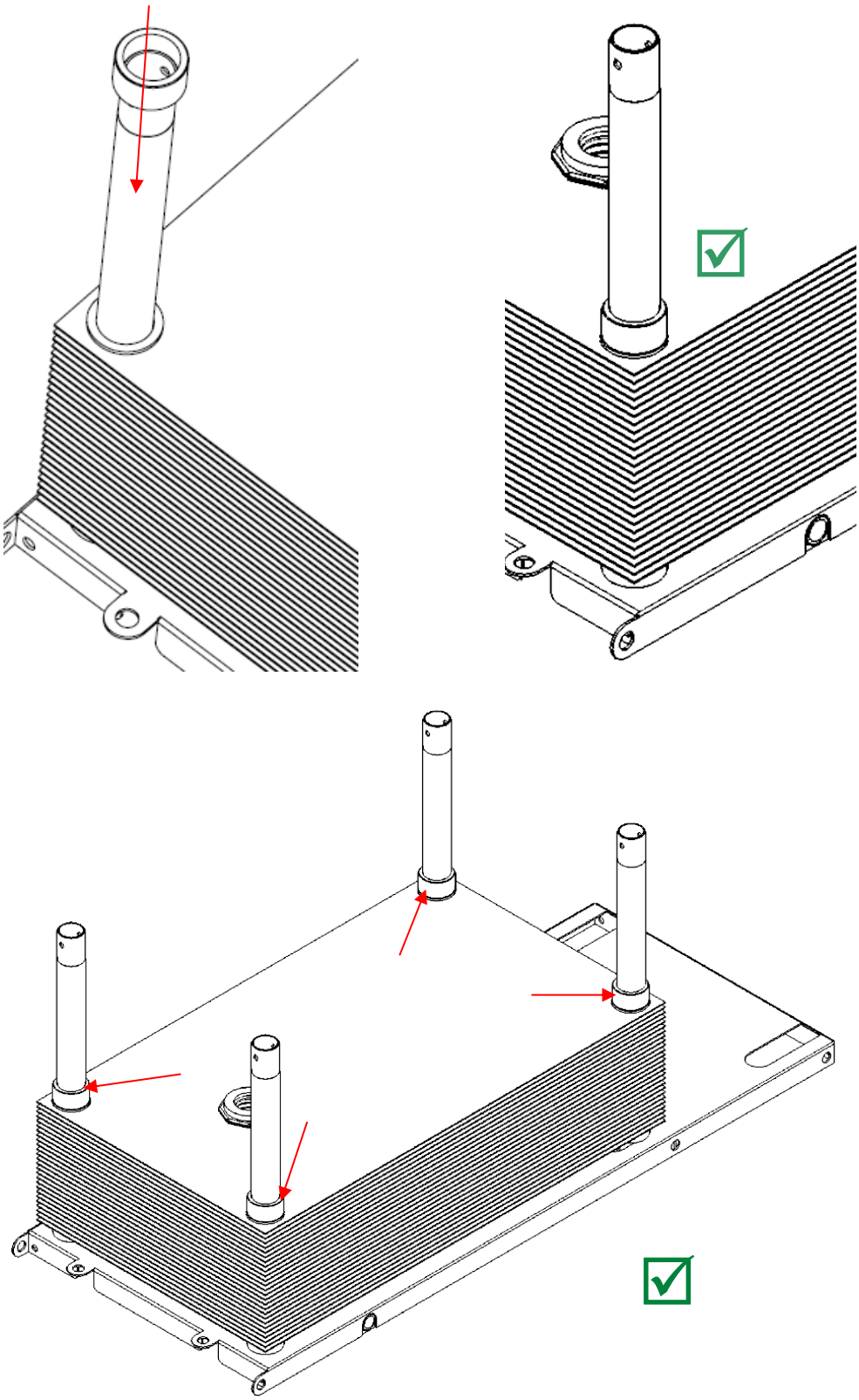

MICRODYNNADIR
A MANN+HUMMEL Company

Step 22: Install the O-rings on the interconnector

- Place 4 (four) O-rings 47 on the interconnector.
- Slide each O-rings until it fits in the slot.

⚠ 4(four) O-rings must be installed.

⚠ Make sure all seals on the interconnector are properly placed on the slots.

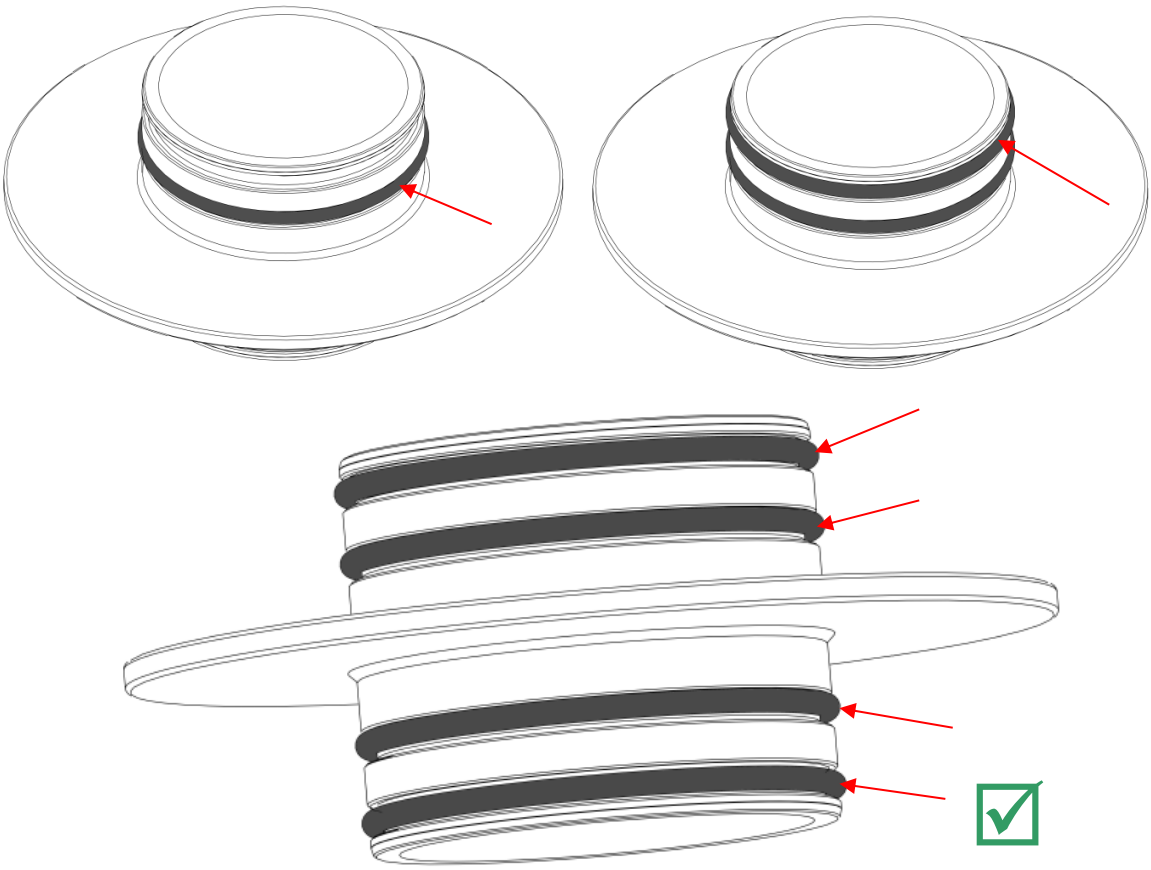

MICRODYNNADIR
A MANN+HUMMEL Company

Step 23: Lubricating the O-rings of the interconnector

- Apply the lubricant throughout the O-rings of the interconnector so that it can be assembled easily without any damage.

⚠ Please make sure all the 4(four) O-rings present on the interconnector are lubricated.

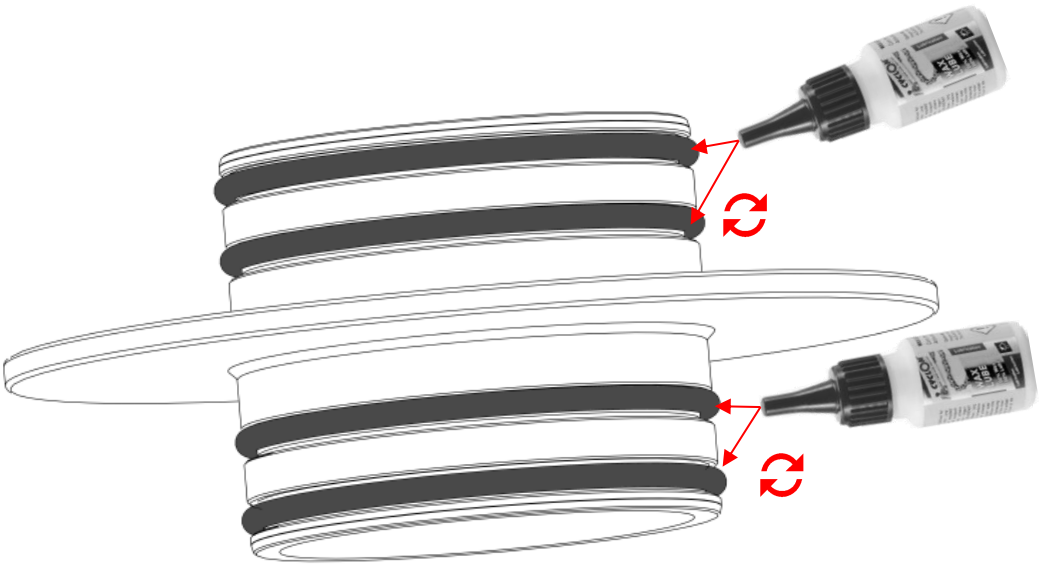

MICRODYNNADIR
A MANN+HUMMEL Company

Step 24: Install the interconnector

- Place the interconnector on the permeate connector of the membrane stack and carefully push it with the palm of your hand.

⚠ Make sure all the seals of the interconnector are properly placed on the slots.

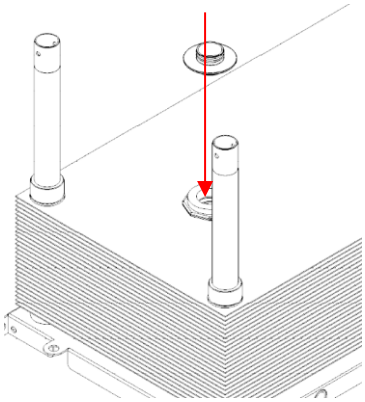

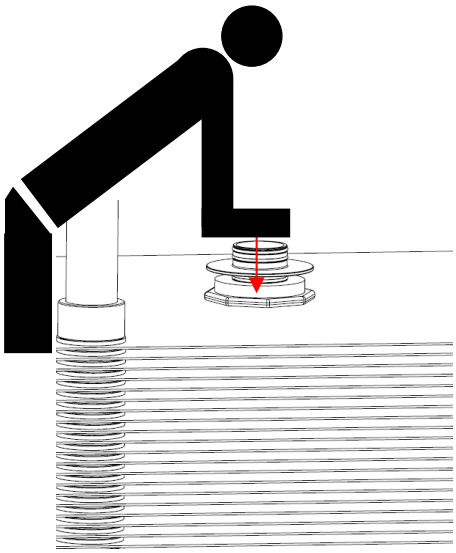

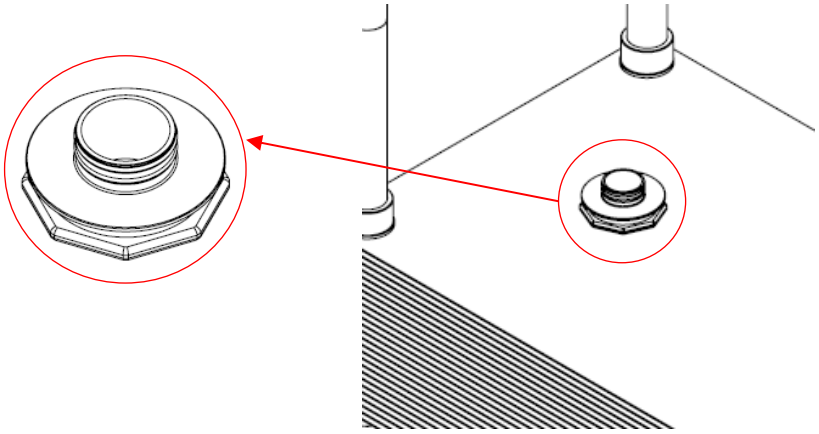

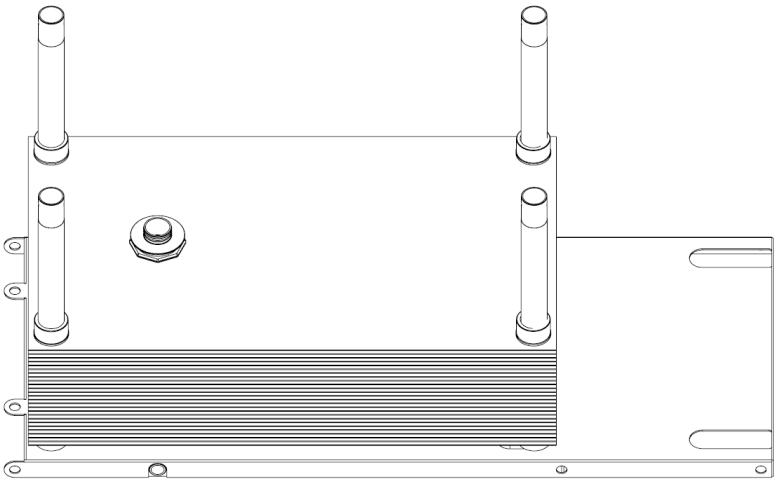

MICRODYNNADIR
A MANN+HUMMEL Company

Step 25: Install the second membrane stack

- With assistance of another person carefully slide the second membrane stack onto the supporting tubes.
- Hold the membrane stack from below at the permeate connector on the connector's side.

⚠ The stack must be evenly pushed onto the supporting tubes.

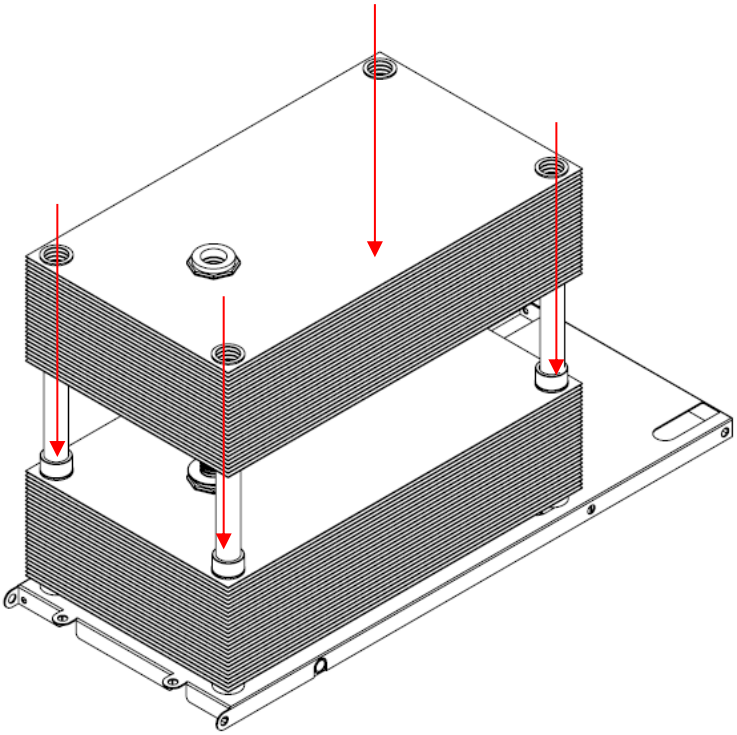

MICRODYNNADIR
A MANN+HUMMEL Company

Step 26: Install the permeate connector

- Align the permeate connector of the membrane stack to the interconnector.
- Push the permeate connector with slight pressure on the interconnector.

⚠ There must be no gap between the permeate connector of the stack and the interconnector.

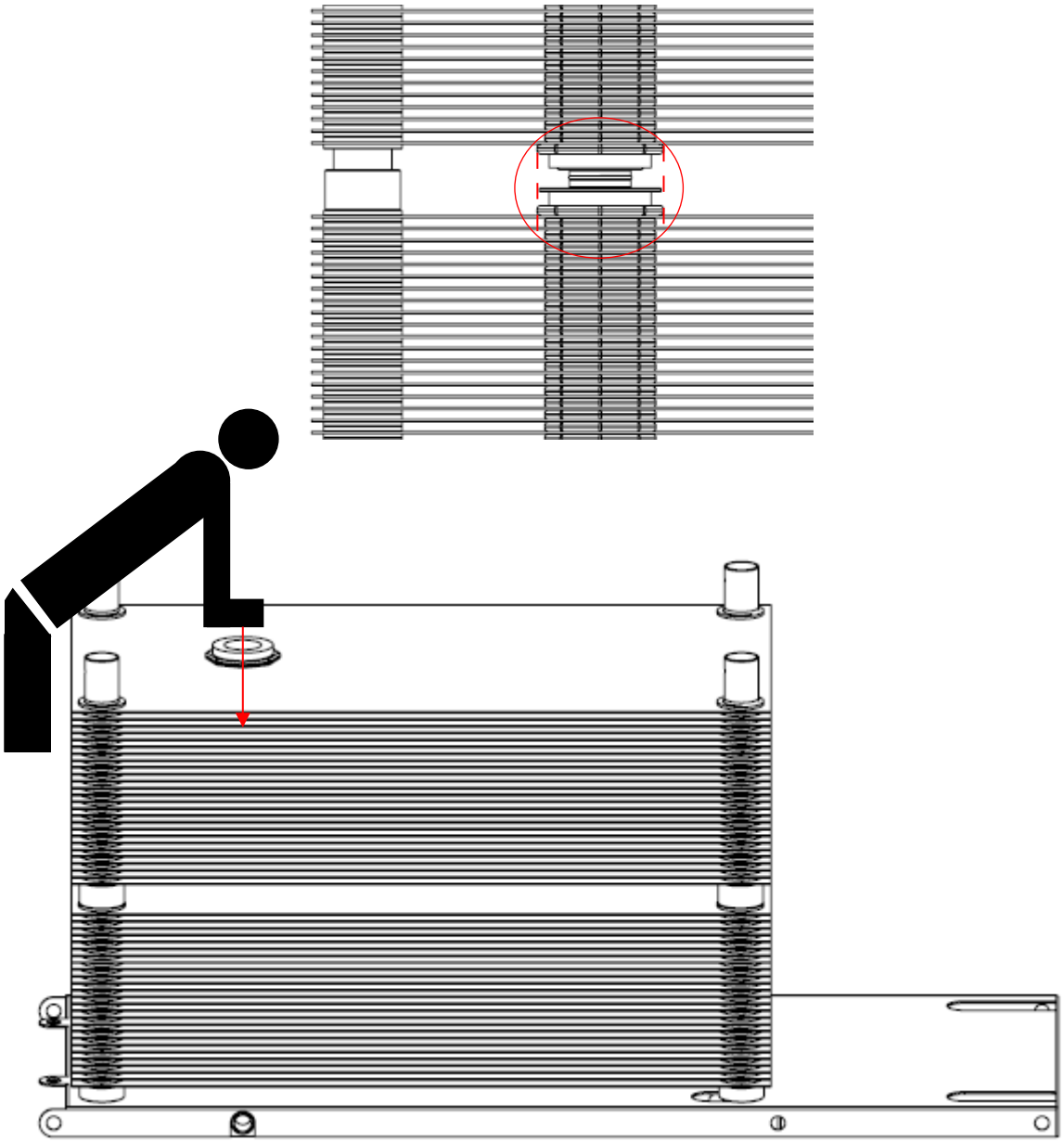

MICRODYNNADIR
A MANN+HUMMEL Company

Step 27: Install spacers

- Place a 9.5 mm spacer onto each of all four supporting tubes.

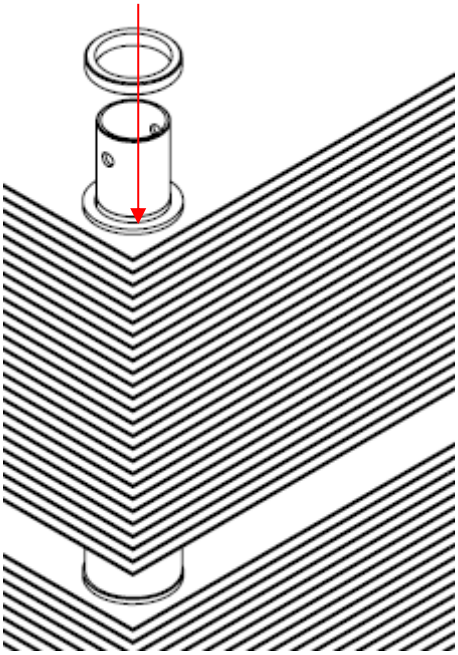

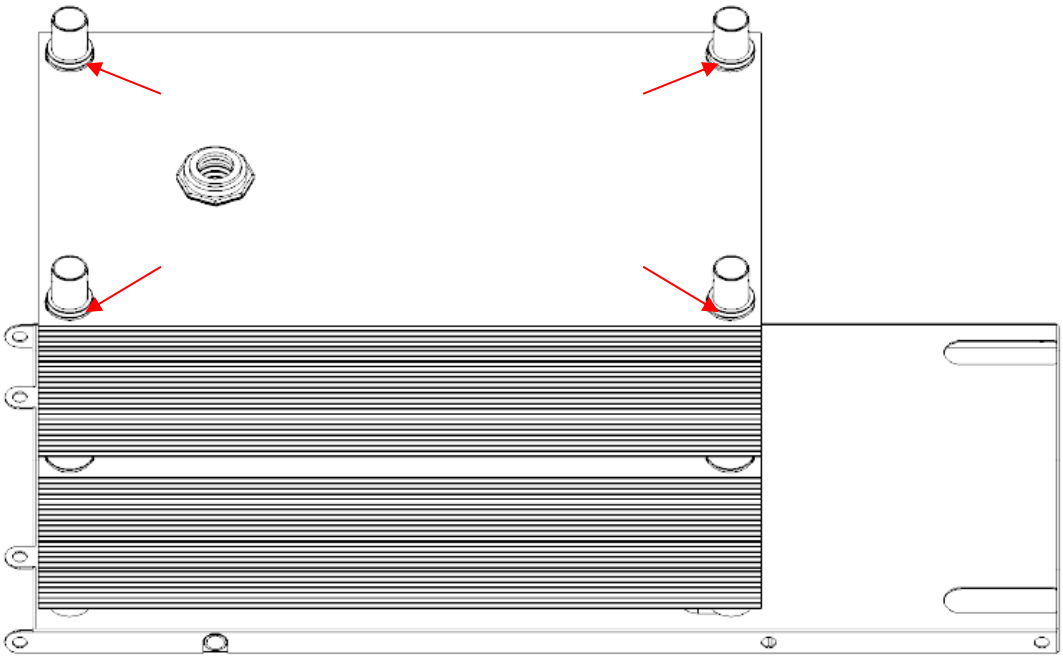

MICRODYNNADIR
A MANN+HUMMEL Company

Step 28: Apply tension on the membrane stack

- Screw one nut (1 ½”) until it touches the spacer on all four supporting tubes.

⚠ There must be no gap between the nut and the spacer (see picture).

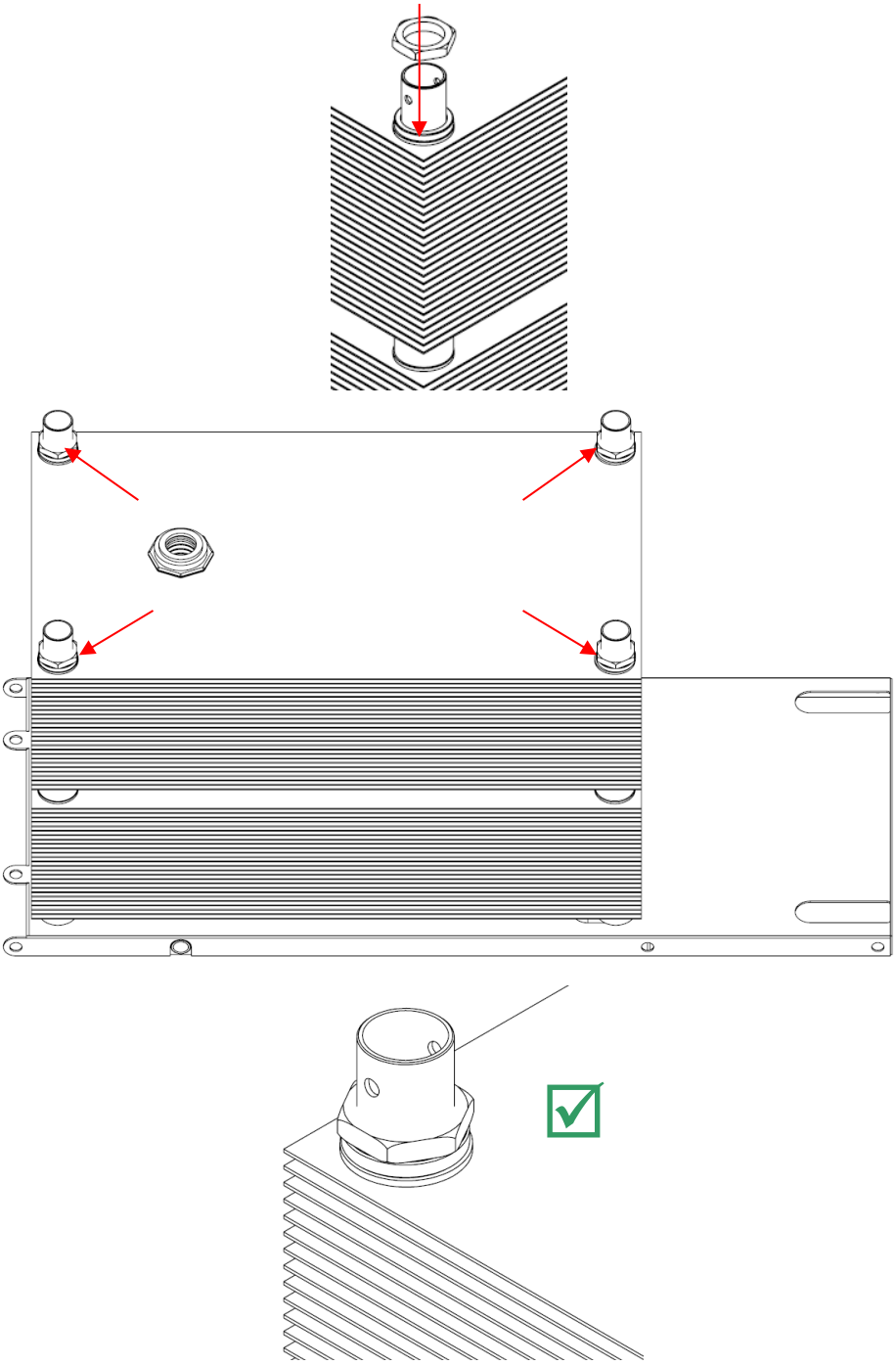

MICRODYNNADIR
A MANN+HUMMEL Company

Step 29: Set up the air manifold

- Screw the (1 ½”) nuts all the way onto both sides of the air manifold.

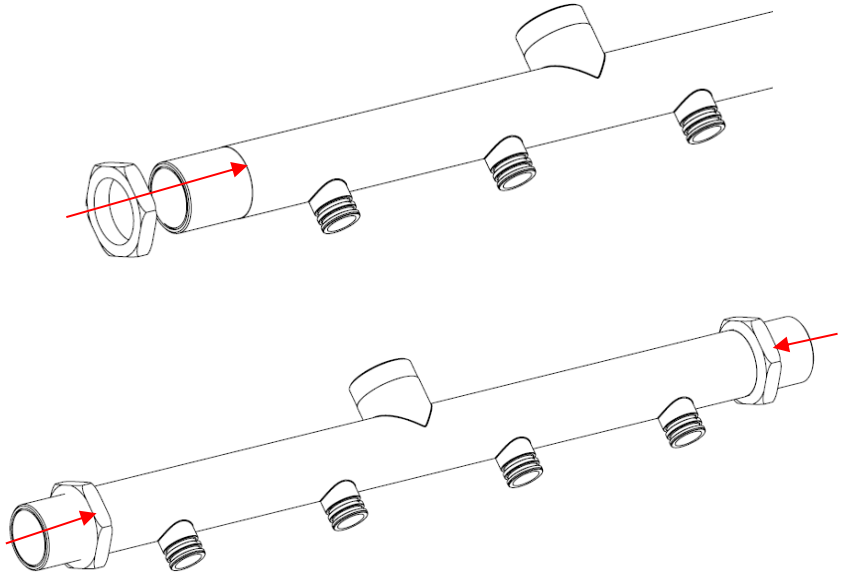

Step 30: Install the O-rings on the air manifold

- Place 8(eight) O-rings 21 on the air manifold.
- Slide the O-rings carefully over the connector until it fits on the slot.

⚠ 8(eight) O-rings must be installed on the air manifold.

⚠ Make sure all the seals on the manifold are properly placed on the slots.

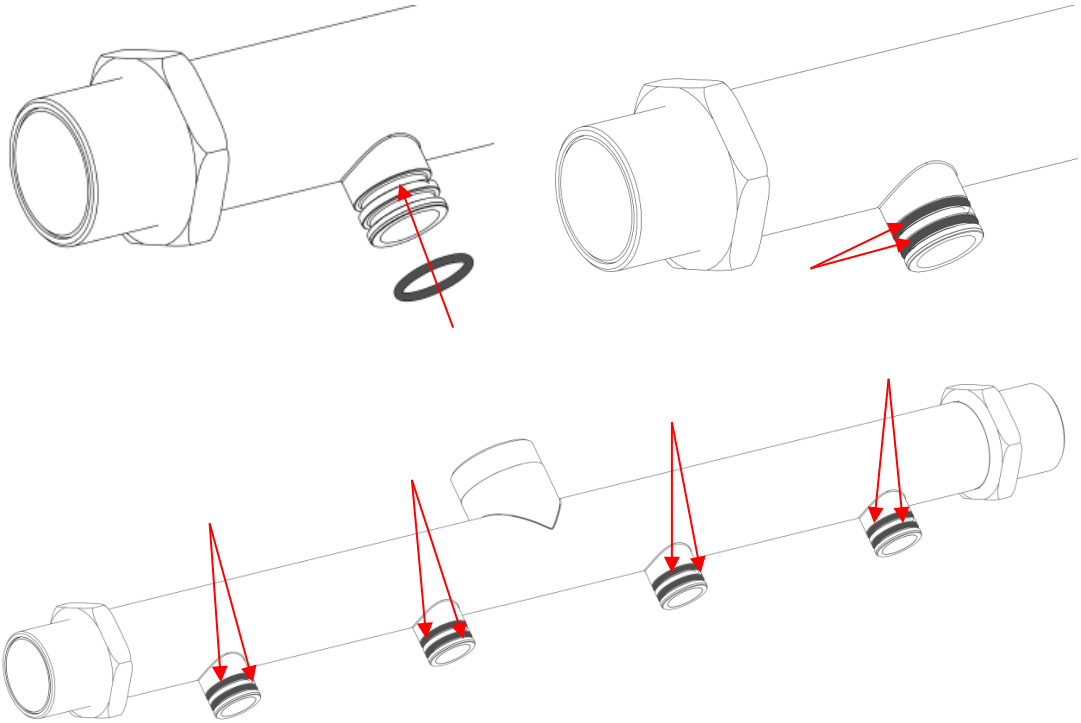

MICRODYNNADIR
A MANN+HUMMEL Company

Step 31: Lubricating the O-rings of air manifold

- Apply lubricant throughout the O-rings present on the air manifold so that aerators are assembled easily without any damage.

⚠ Please make sure all the 8 (eight) O-rings installed on the air manifold are lubricated.

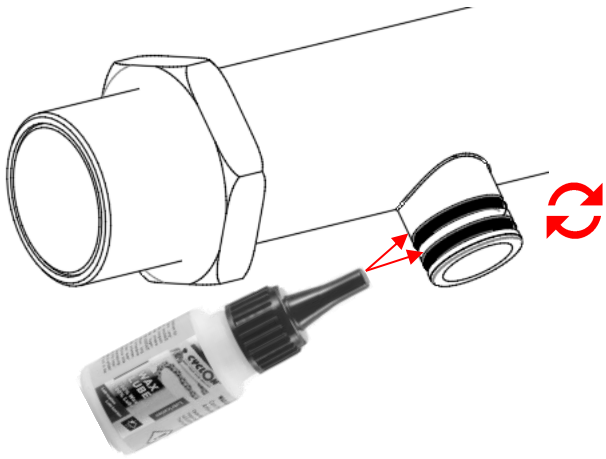

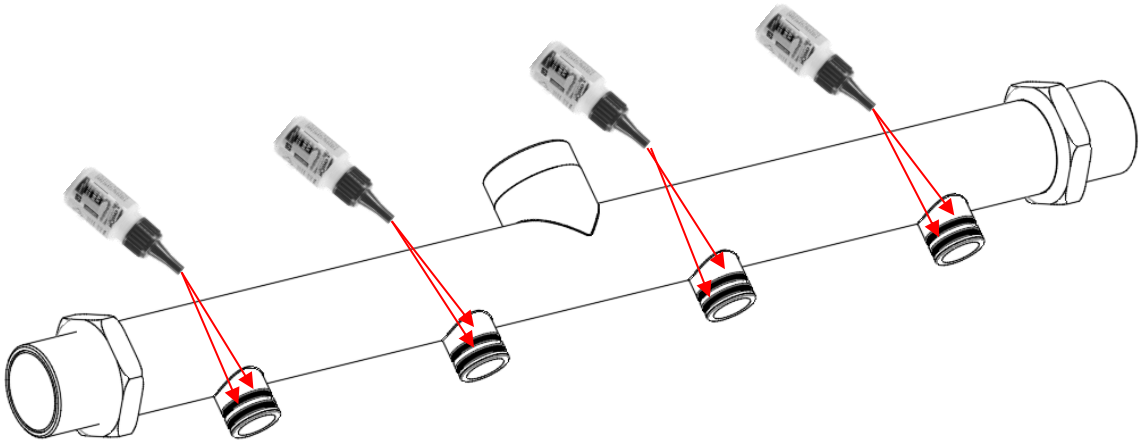

MICRODYNNADIR
A MANN+HUMMEL Company

Step 32: Set up the counter holder

- Screw the (1 ½”) nuts all the way onto both sides of the counter holder.

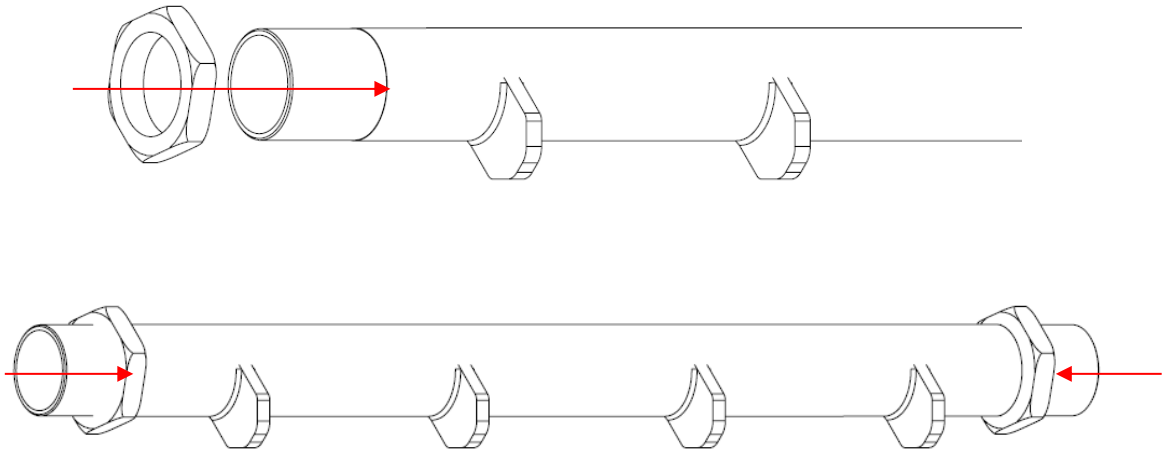

Step 33: Install the air manifold and counter holder

- Place the air manifold and the counter holder onto the cutout of the frontal plate, with the nut’s perpendicular to the plate.

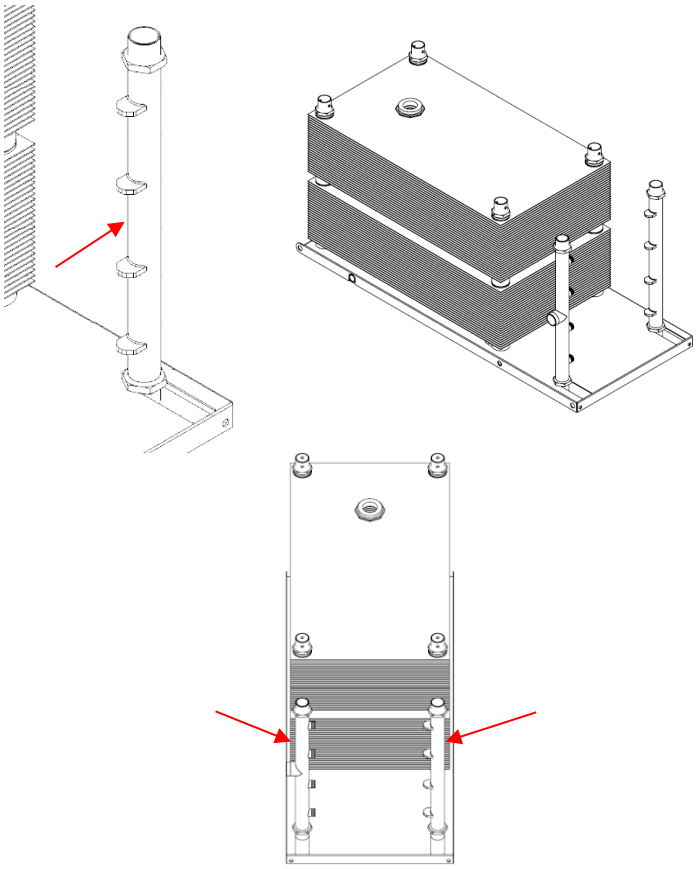

MICRODYNNADIR
A MANN+HUMMEL Company

Step 34: Prepare the second frontal plate

- Place the plate on the flat surface with permeate connector facing upwards.

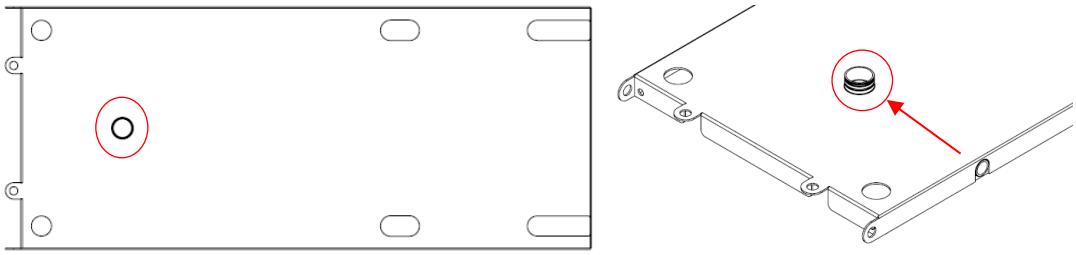

Step 35: Install the spacer on the frontal plate

- Push the rubber spacer onto the permeate connector until it is in contact with the plate.

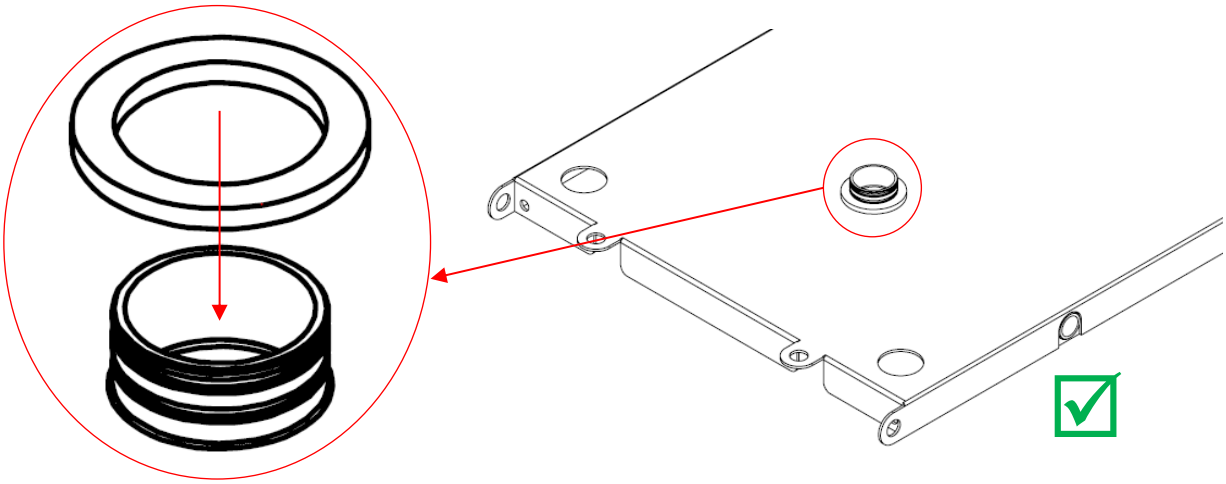

MICRODYNNADIR
A MANN+HUMMEL Company

Step 36: Install the O-rings

- Install 2 (two) O-rings 47 on the permeate connector.
- Carefully slide each O-ring over the permeate connector and fit it on the slot.

⚠ 2 (Two) O-rings must be installed.

⚠ Make sure all the seals are present on the permeate connector and correctly placed on the slot.

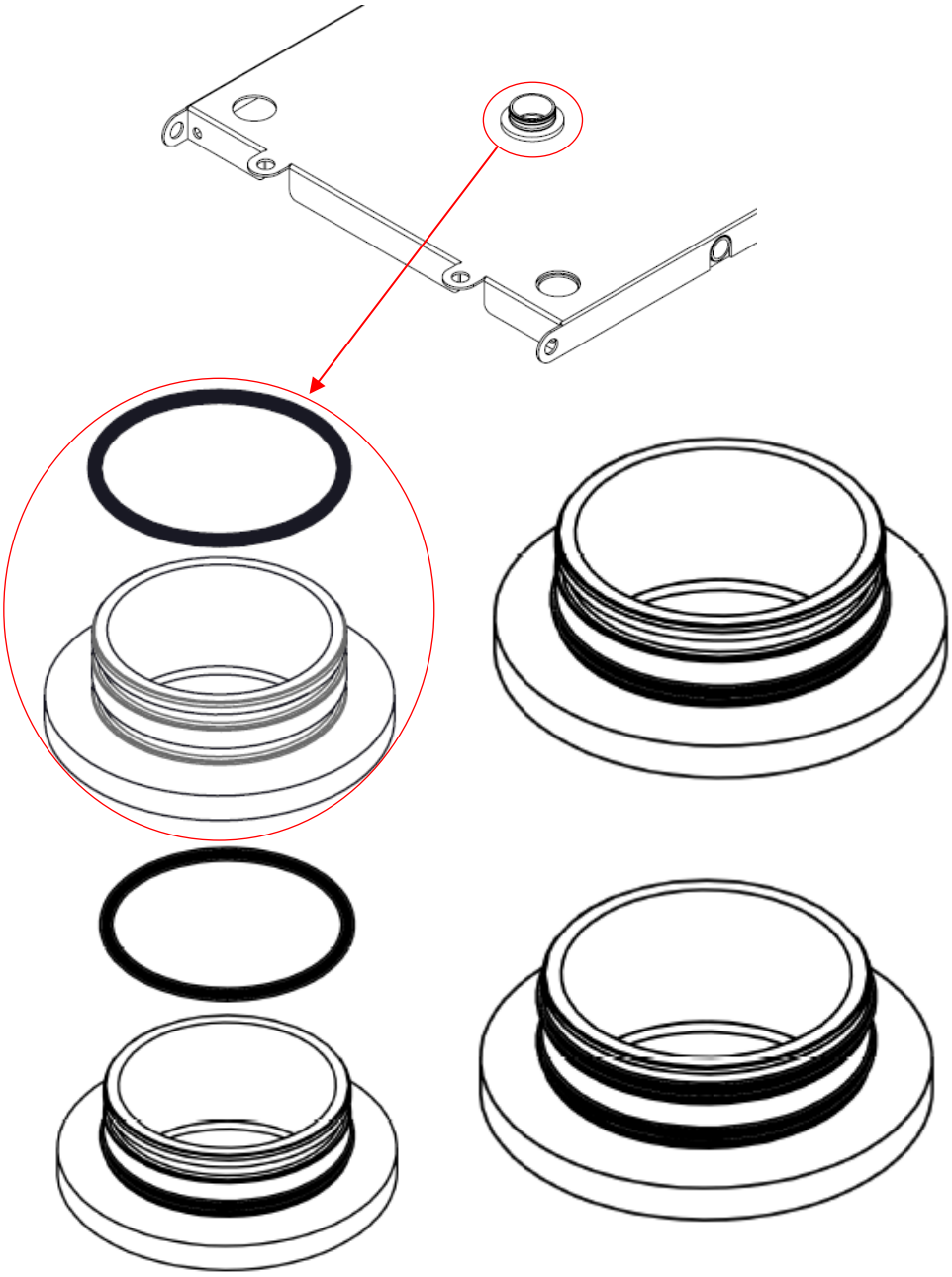

MICRODYNNADIR
A MANN+HUMMEL Company

Step 37: Lubricating O-rings present on the permeate connector

- Lubricating the O-rings present on the permeate connector to install membrane stack easily without damaging it.
- Apply lubricant around O-rings fully so that O-rings are completely lubricated.

⚠ Please make sure lubrication is applied on the 2(two) O-rings present on the permeate connector.

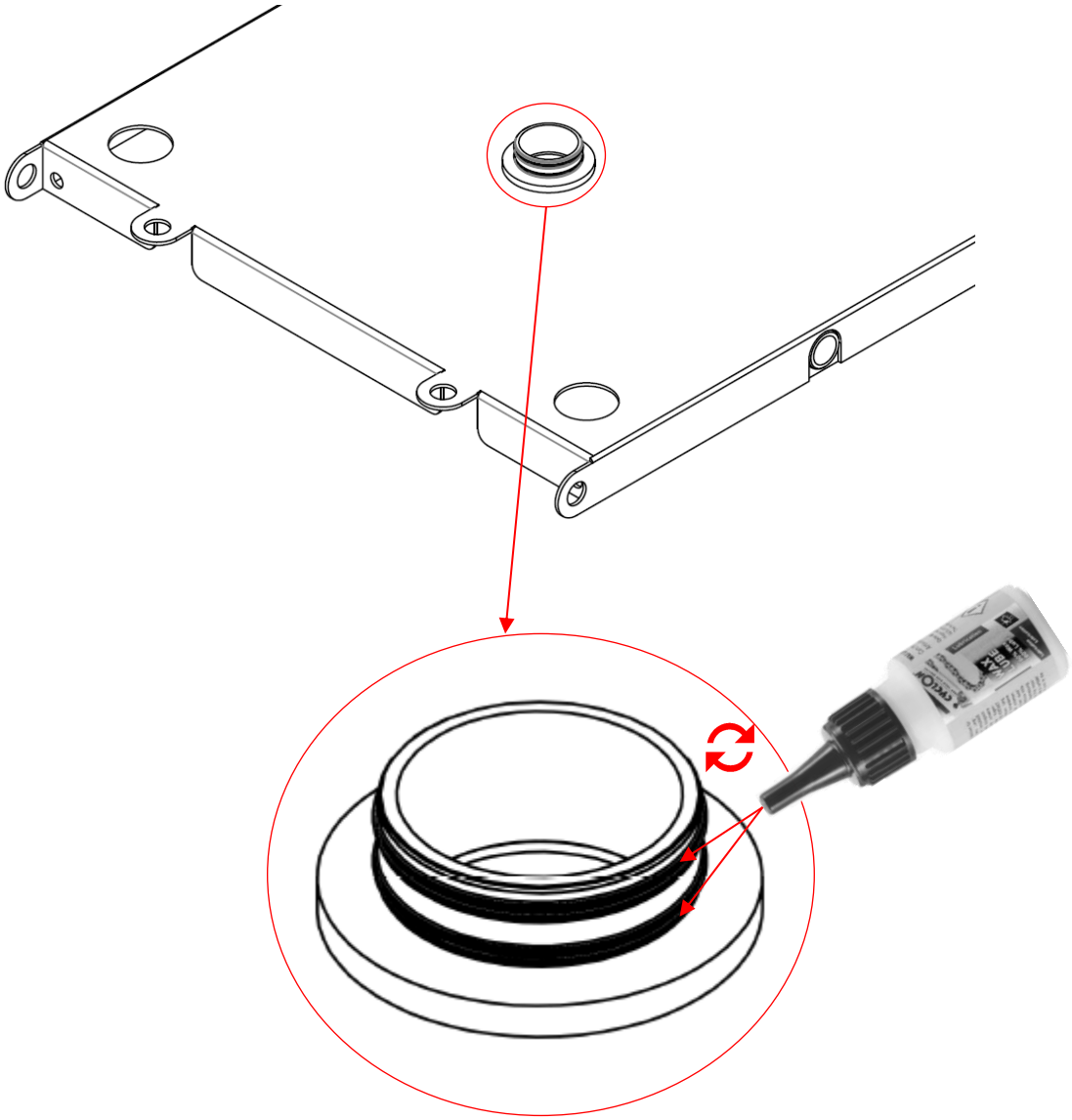

MICRODYNNADIR
A MANN+HUMMEL Company

Step 38: Install the second frontal plate

- Carefully slide the frontal plate onto the supporting tubes, the air distributor, and the counter holder.
- Push the collector of the frontal wall all the way against the permeate connector.

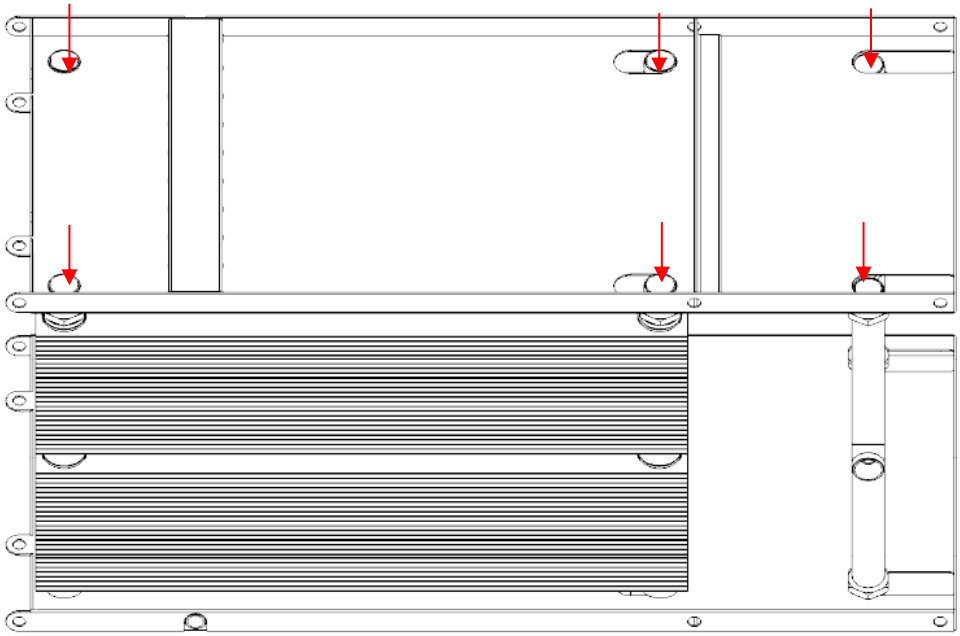

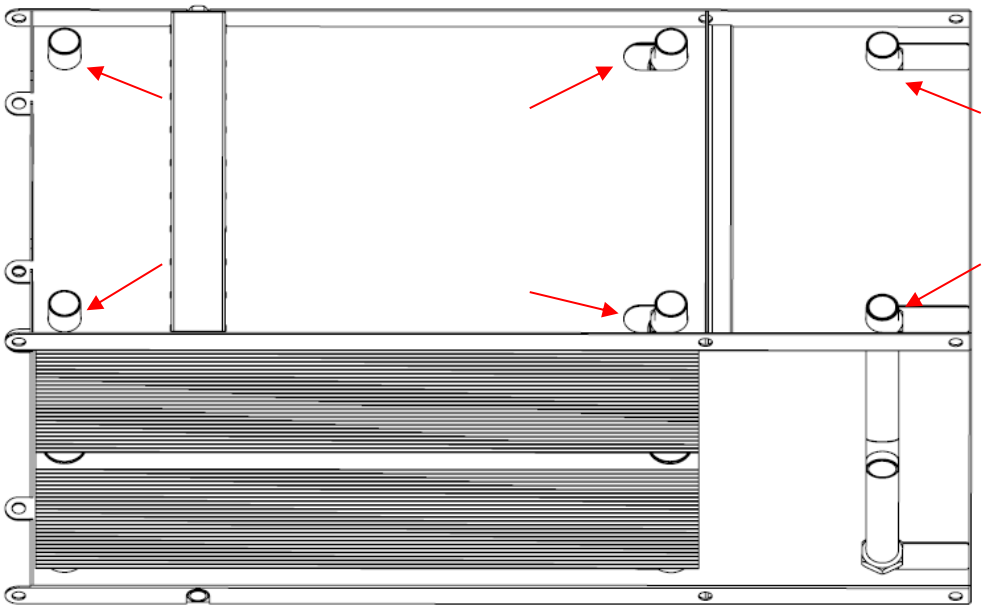

MICRODYNNADIR
A MANN+HUMMEL Company

Step 39: Install the membrane stack on the permeate connector

- Align the permeate connector of the frontal plate to the permeate connector of the membrane stack.
- Push the permeate connector of the plate with slight pressure onto the connector of the membrane stack.

⚠ There must be no gap between the permeate connector of the stack and the interconnector.

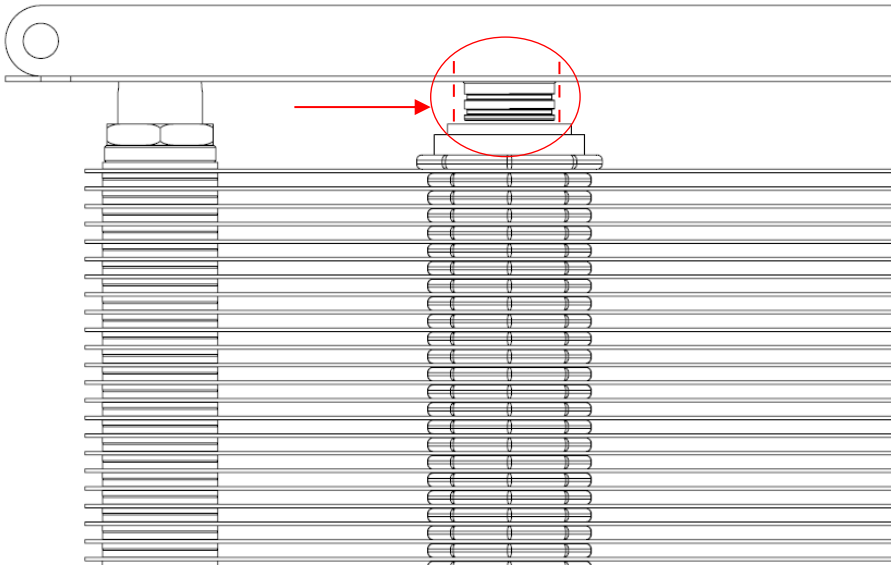

Step 40: Install spring washers

- Place one spring washer on each of the top two supporting tubes.

⚠ Spring washer must only be placed on the top two supporting tubes.

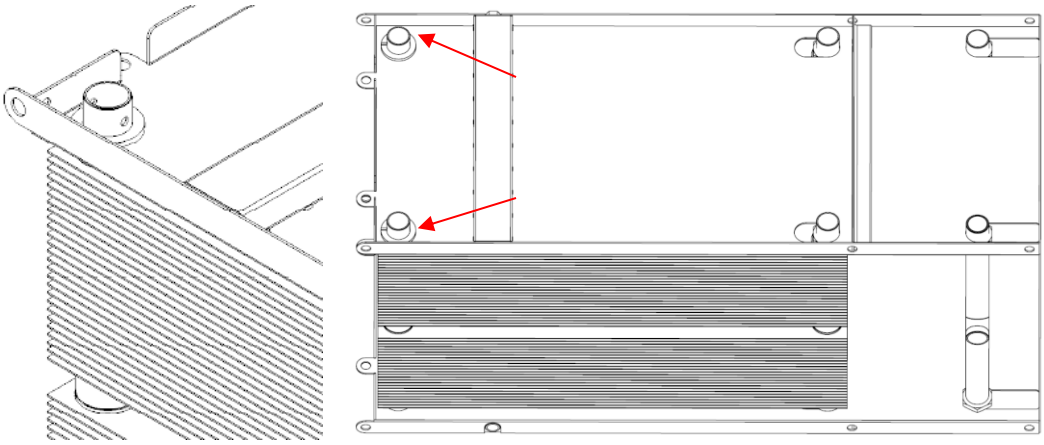

MICRODYNNADIR
A MANN+HUMMEL Company

Step 41: Install lock plates on air manifold

- Place the lock plates over the lower elongated holes of the side facing up.

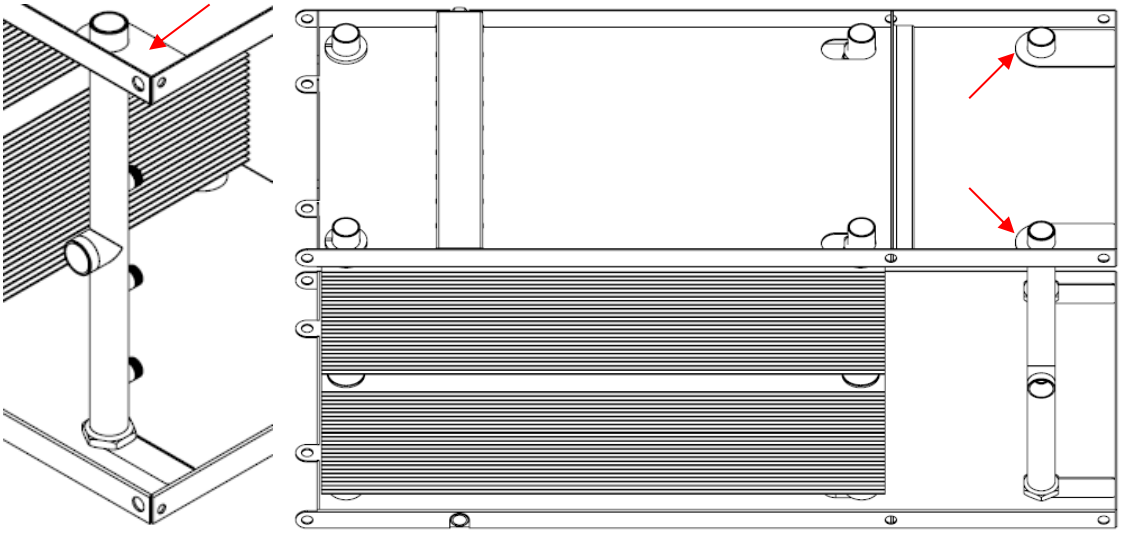

Step 42: Install spring washers

- Place on spring washer on each of the two lock plates facing up.

⚠ Spring washers are only foreseen on the four outer support tubes.

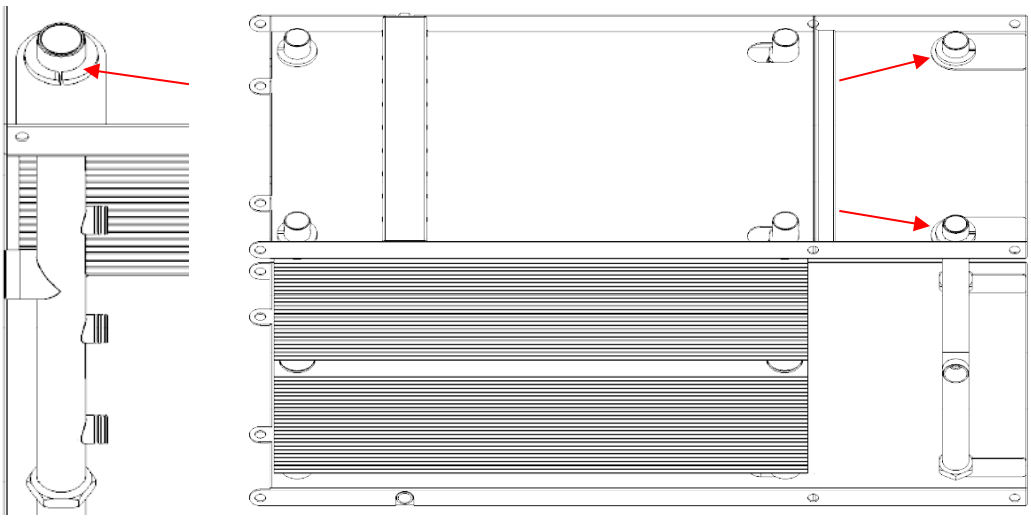

MICRODYNNADIR
A MANN+HUMMEL Company

Step 43: Install the nuts

- Screw one nut (1 ½”) with your hand onto each of the 6 (six) tubes facing this side, but do not tighten them yet.

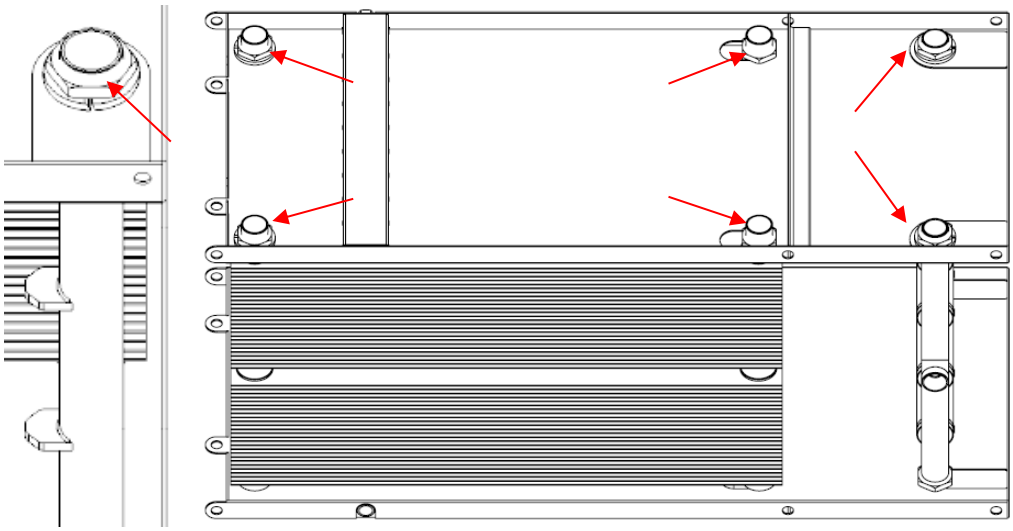

MICRODYNNADIR
A MANN+HUMMEL Company

Step 44: Install the aerators

- Check all aerator connections to ensure that the O-rings are fit cleanly in the slots.

⚠ Make sure all the seals are present and well positioned in the slots.

- Turn the air distributor sideways so that all four aerators can be easily pushed in.
- Carefully slide all four aerators onto the air manifold.
- The nose of the clamp must point downwards, to the opposite direction of the membrane stack.

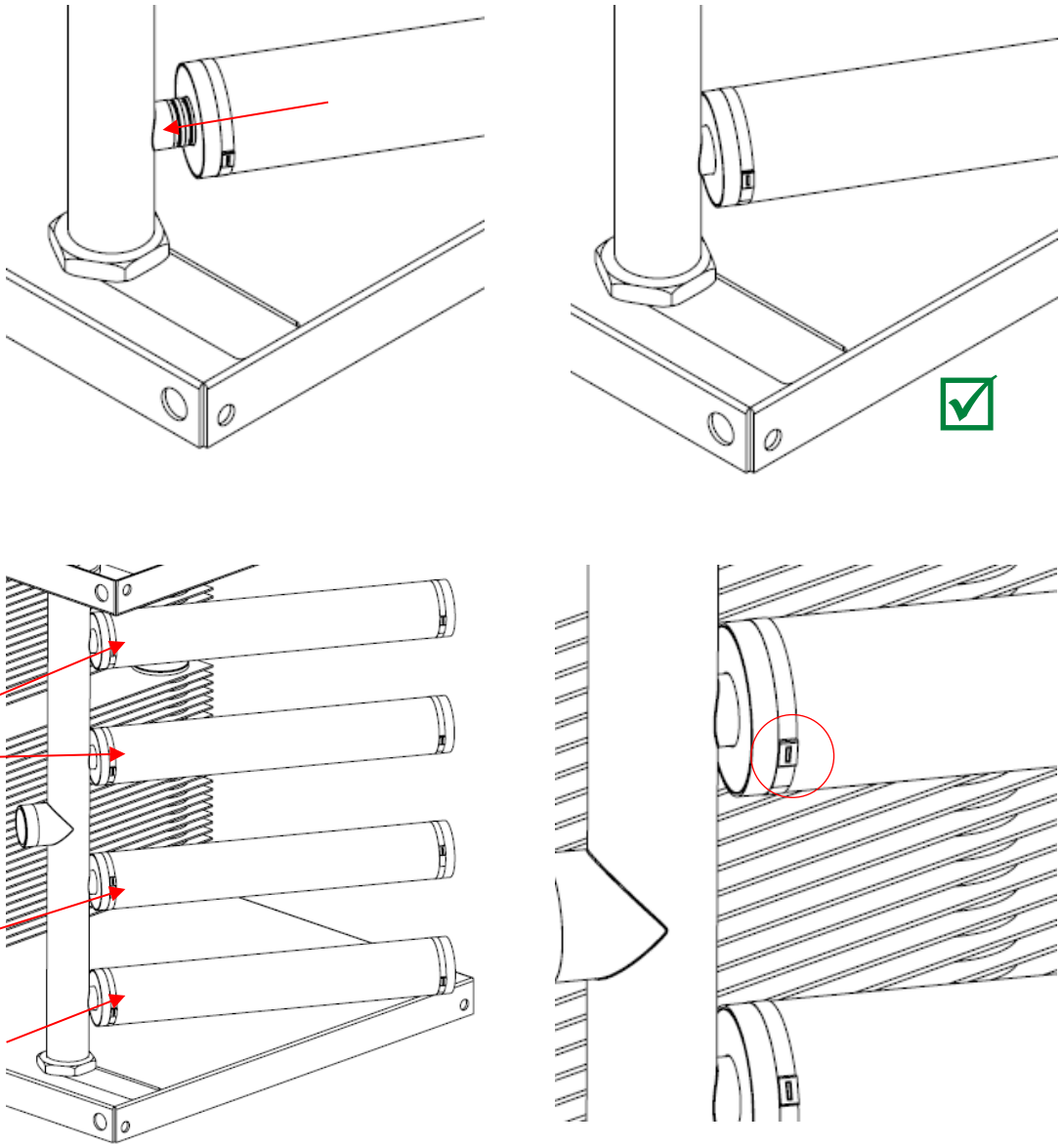

MICRODYNNADIR
A MANN+HUMMEL Company

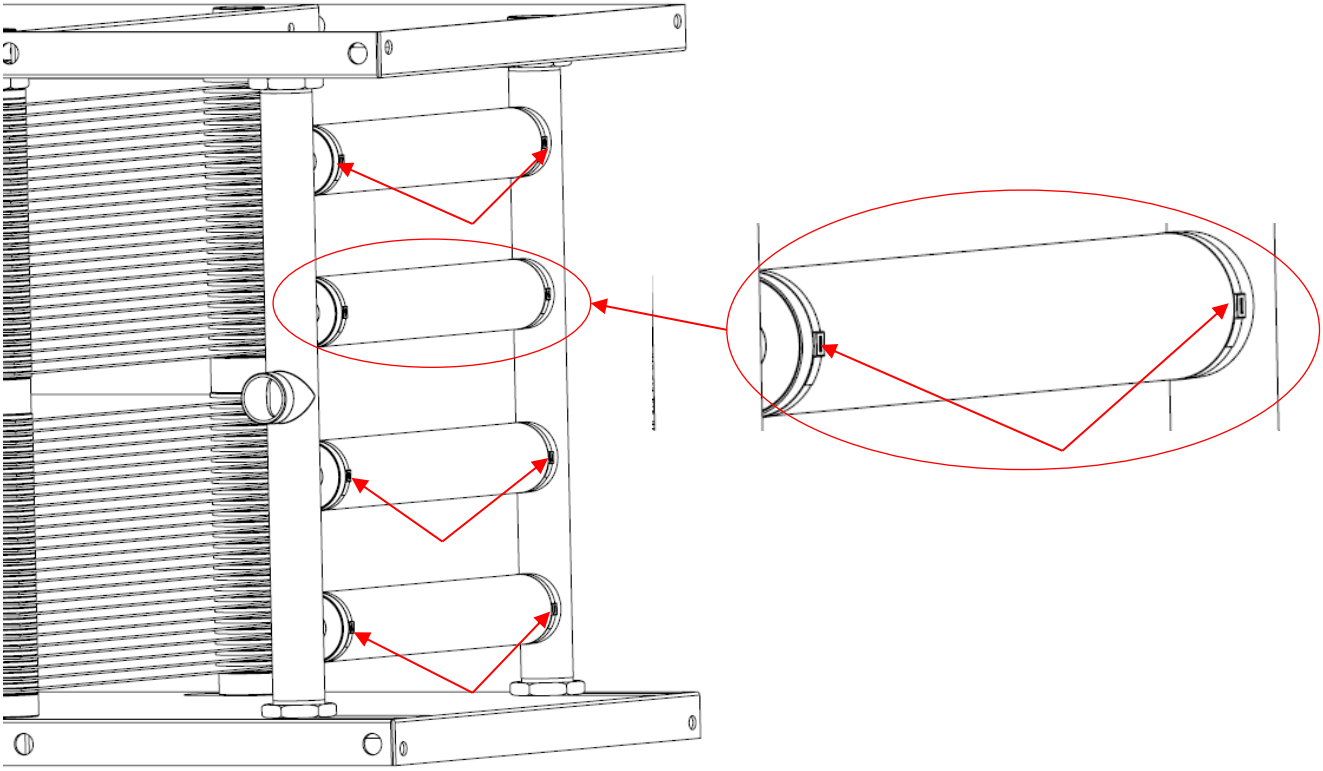

MICRODYNNADIR
A MANN+HUMMEL Company

Step 45: Mount the aerators on the counter holder

- Guide and position the counter holder into the slots provided on the aerator tubes.
- Turn the counter holder to the aerator tubes until the lock lugs are parallel to the aerator.

⚠ Make sure all the aerators are firmly positioned in the counter holder.

⚠ The nose of the clamps must be pointing downward in the opposite direction of the membrane stack.

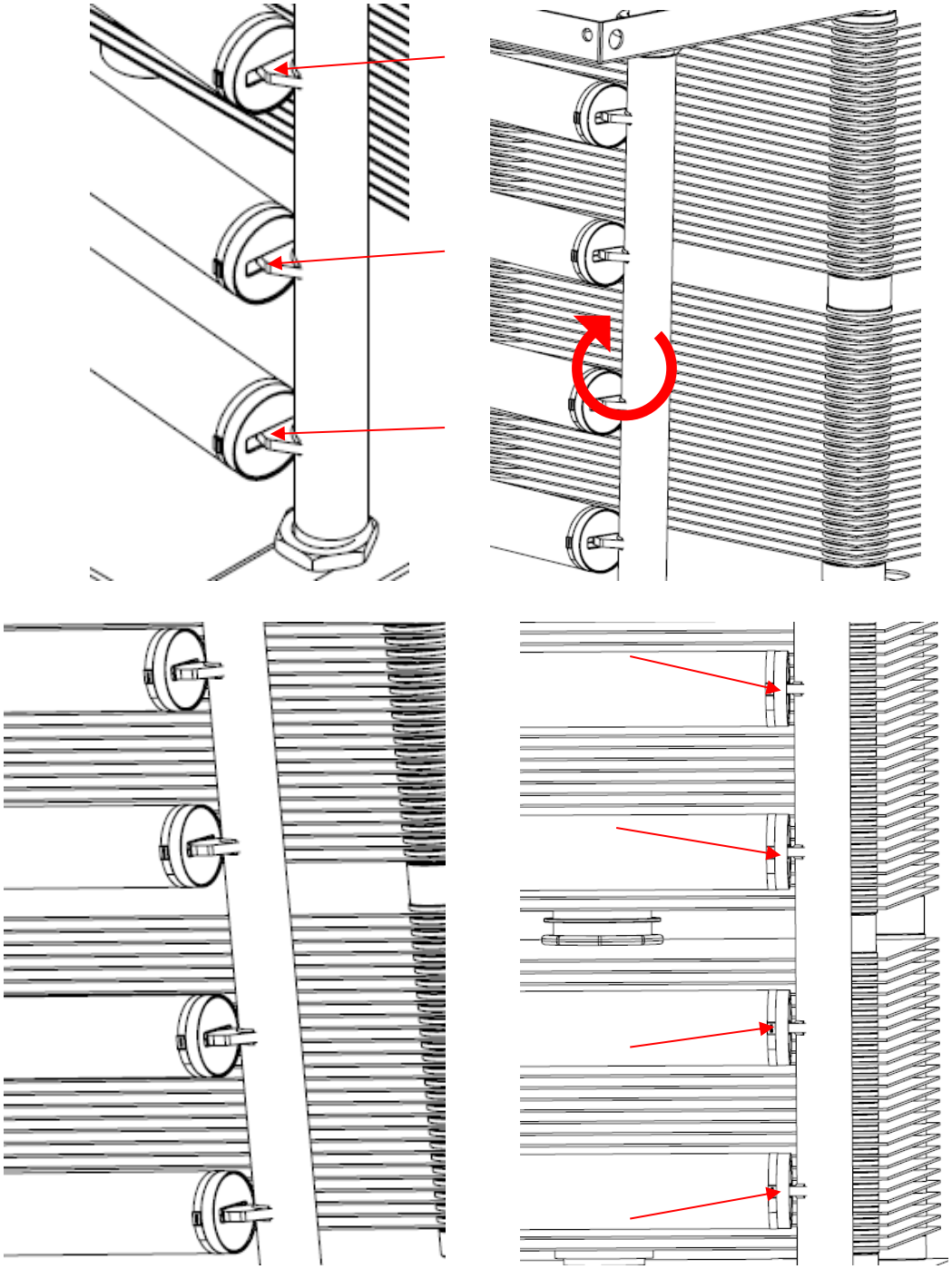

MICRODYNNADIR
A MANN+HUMMEL Company

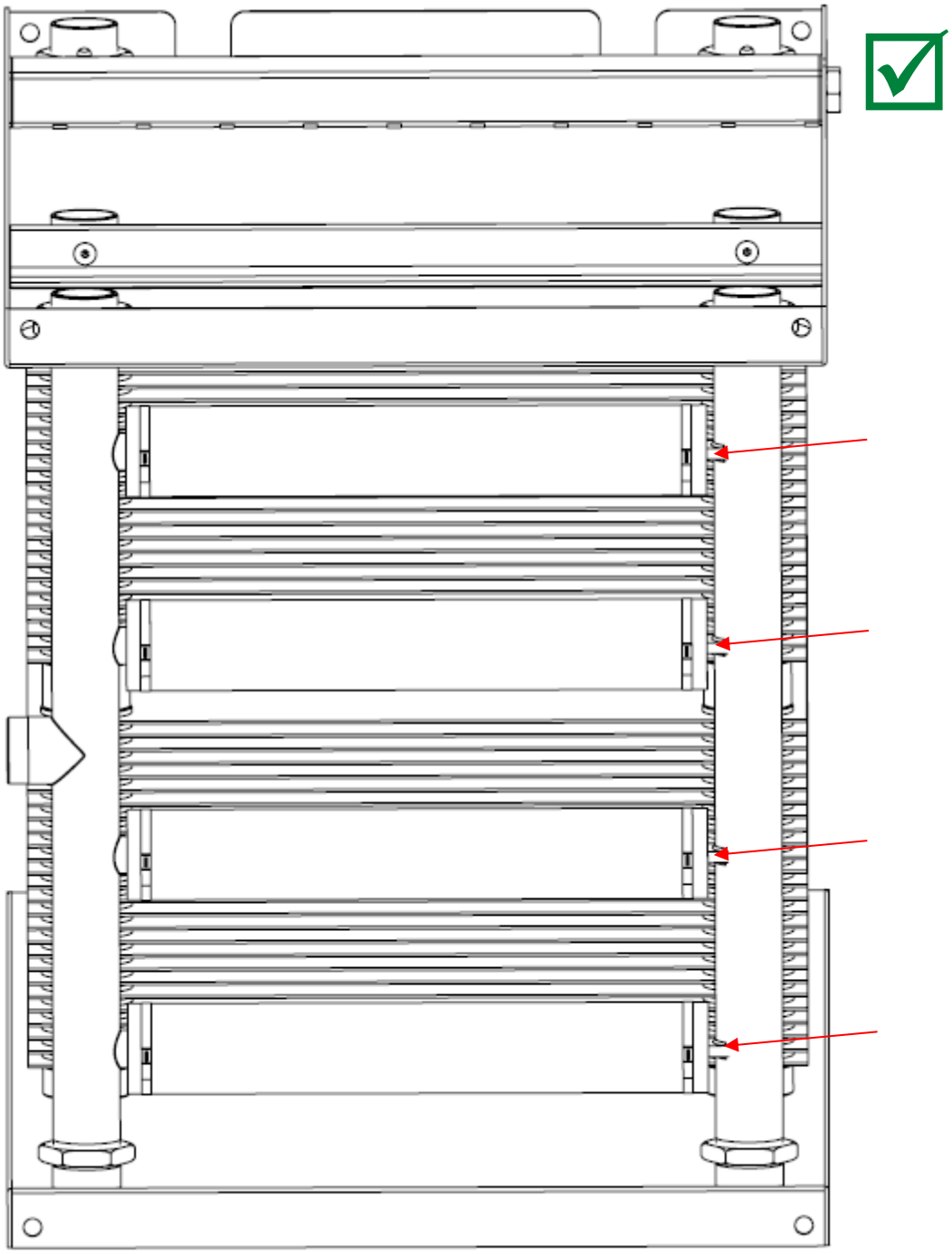

MICRODYNNADIR
A MANN+HUMMEL Company

Step 46: Raise the module

- Grab the module on the steel frame and turn it sideways.

⚠ DO NOT hold on the membrane stack while turning the module.

- Grab the module on the steel frame and place it upright.

⚠ DO NOT hold on the membrane stack while raising the module.

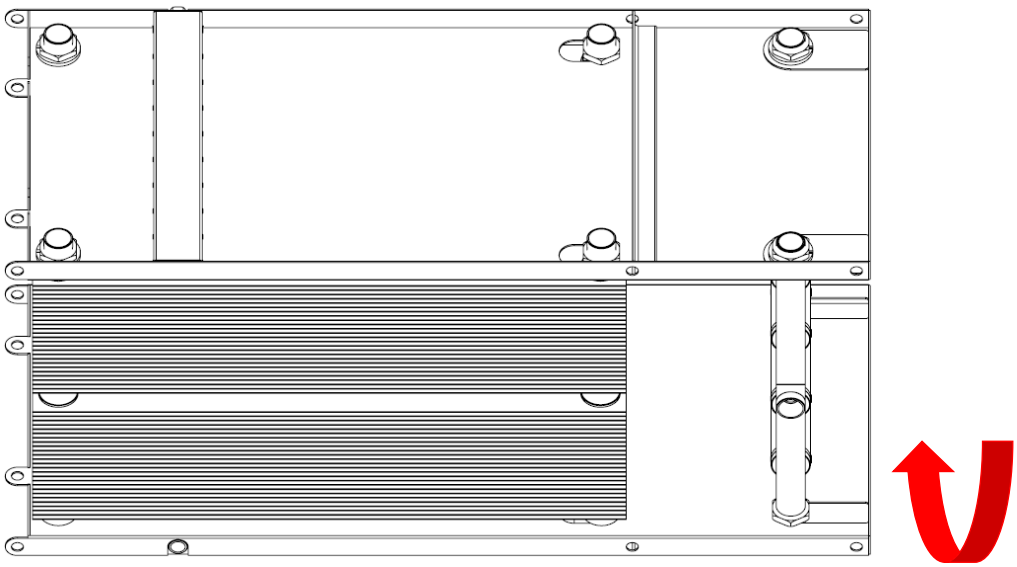

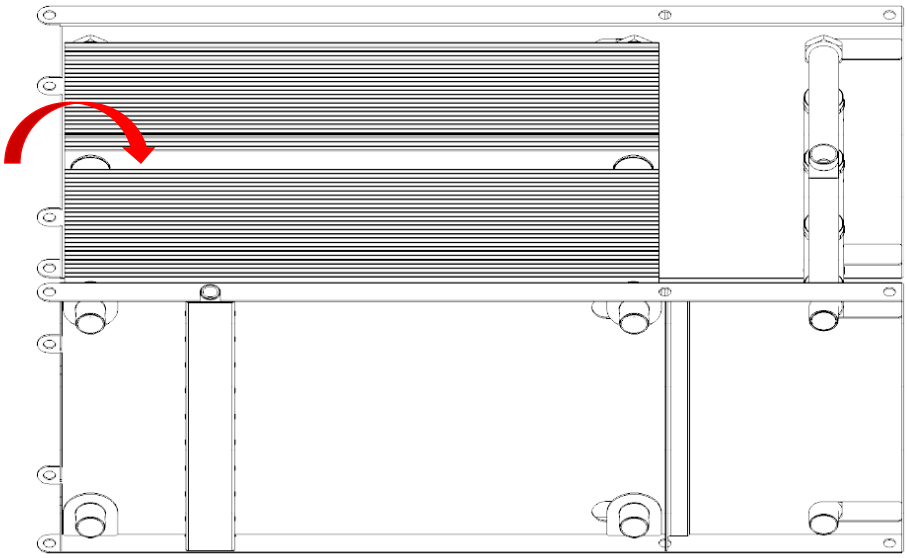

MICRODYNNADIR
A MANN+HUMMEL Company

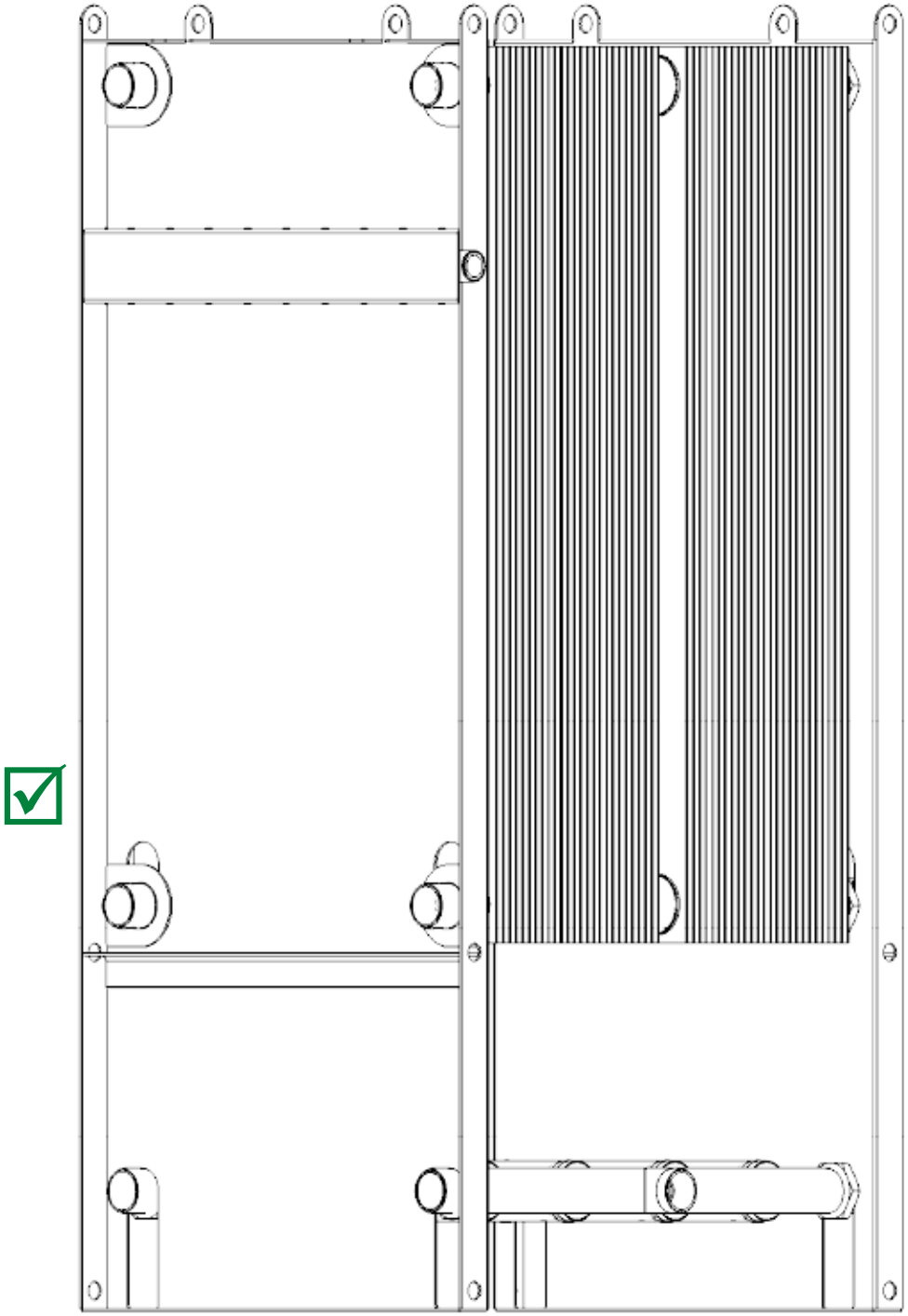

MICRODYNNADIR
A MANN+HUMMEL Company

Step 47: Install lock plates on air manifold

- On the side that was facing down, place the lock plates over the lower elongated holes.

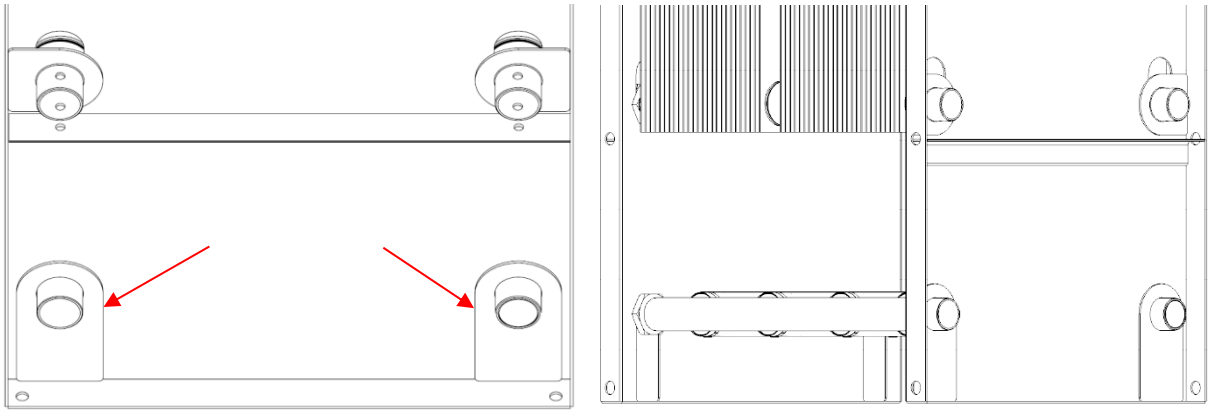

Step 48: Install spring washers

- Place one spring washer on each of the two lock plates that have just been installed.

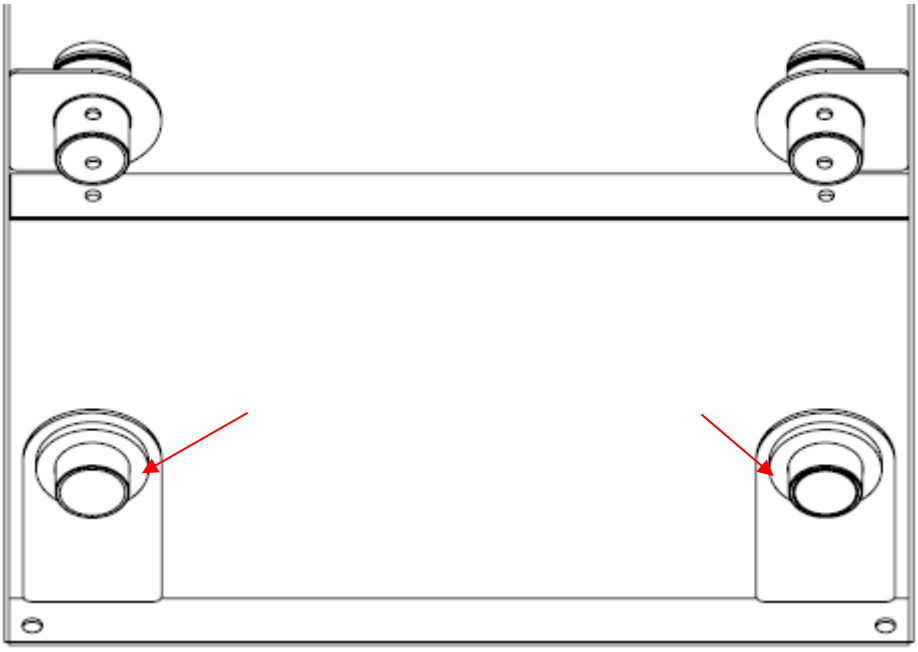

MICRODYNNADIR
A MANN+HUMMEL Company

Step 49: Place the nuts

- Screw one nut (1 ½”) over each washer ring by hand.
- Tighten all four nuts of the diffusor system firmly with the Open-End wrench (optinally a pipe wrench can be used).

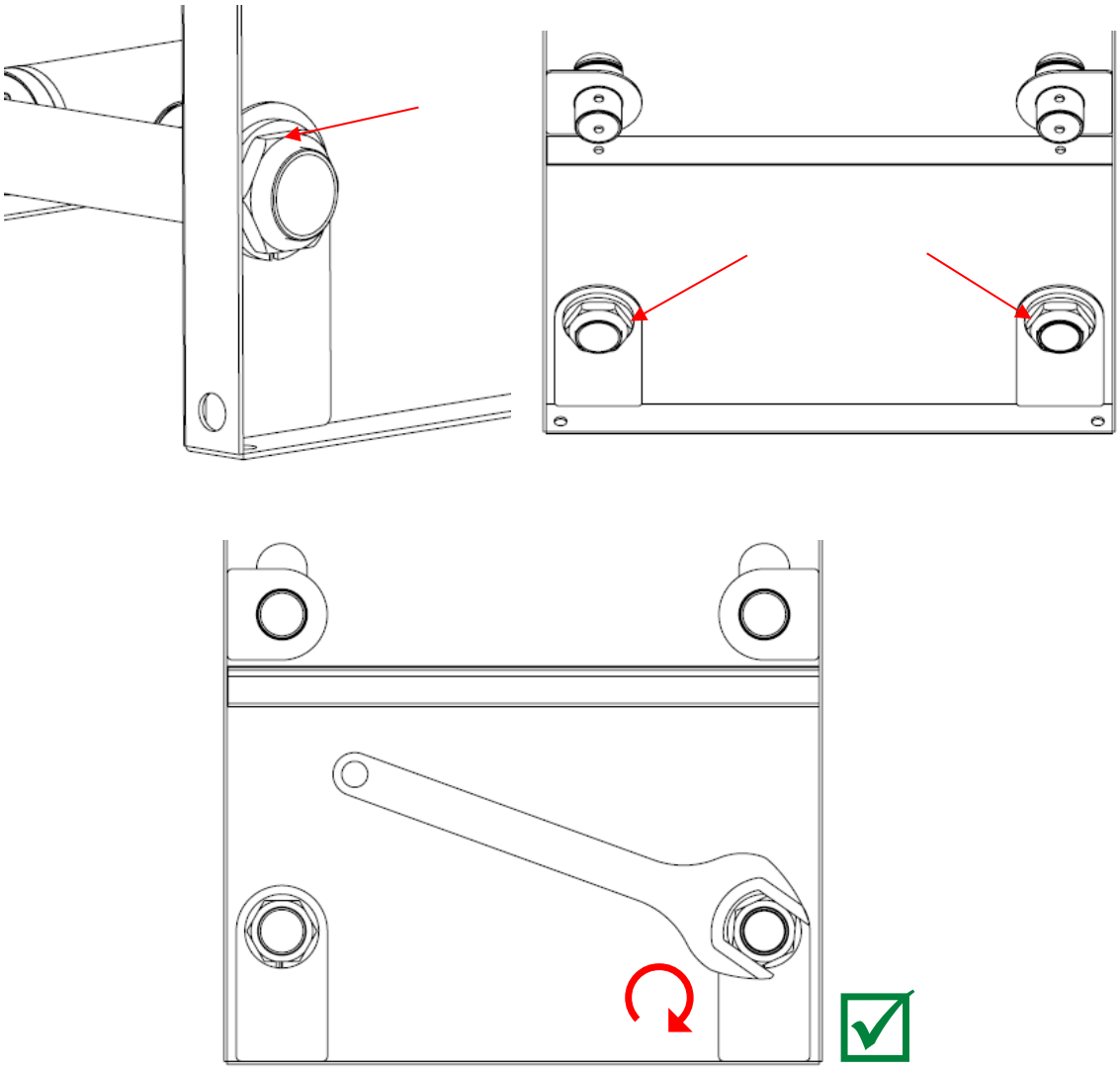

MICRODYNNADIR
A MANN+HUMMEL Company

Step 50: Apply tension on the stack

- Push an M8 Allen screw through each of the holes on the bracket and supporting tube.
- Screw an M8 locknut onto the Allen screw with your hands.
- Tighten the Allen screw and locknut firmly using a 5 mm Allen key and 13 mm ring wrench.

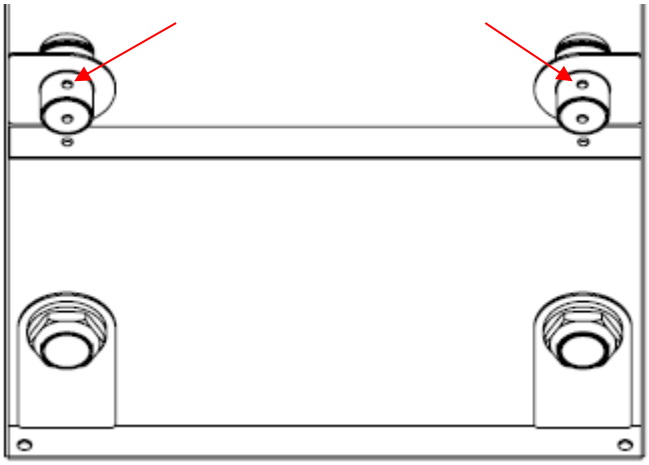

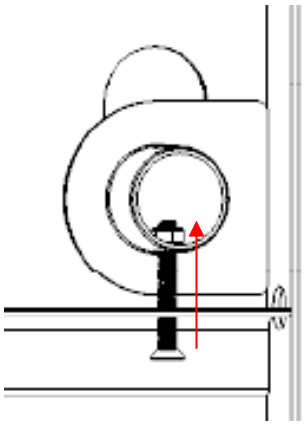

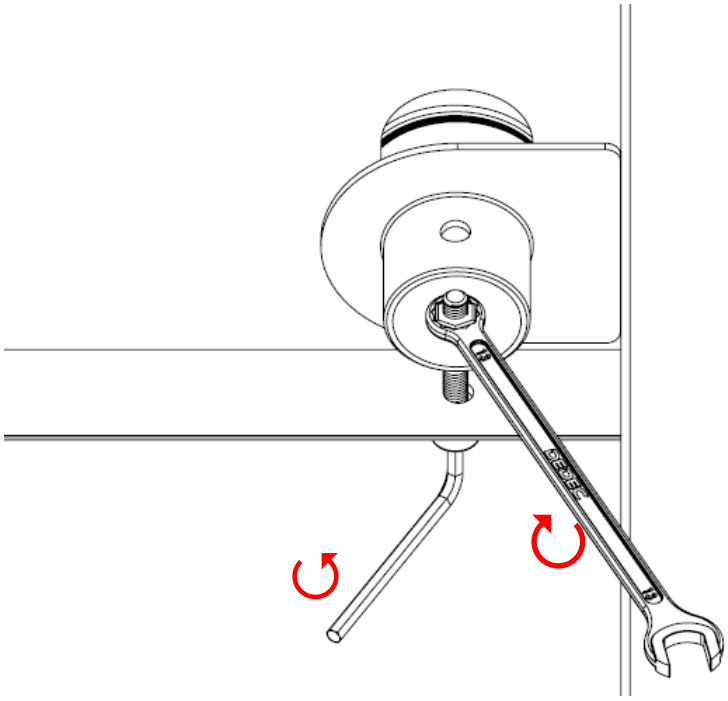

MICRODYNNADIR
A MANN+HUMMEL Company

Step 51: Tighten nuts

- Tighten all nuts (1 ½”) of the module firmly with the Open-End wrench (optinally a pipe wrench can be used).

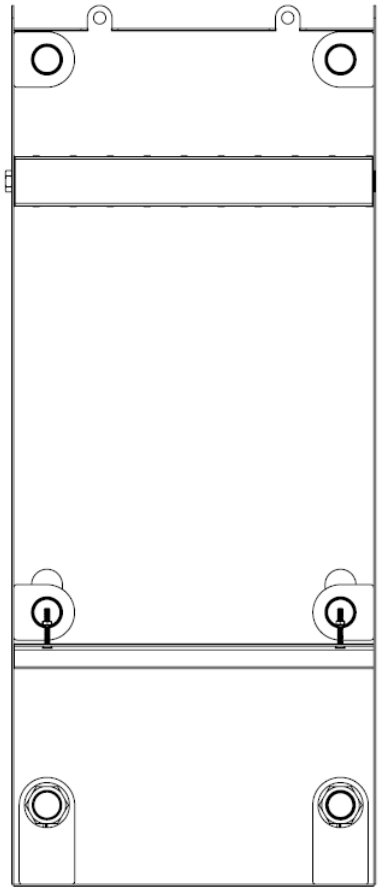

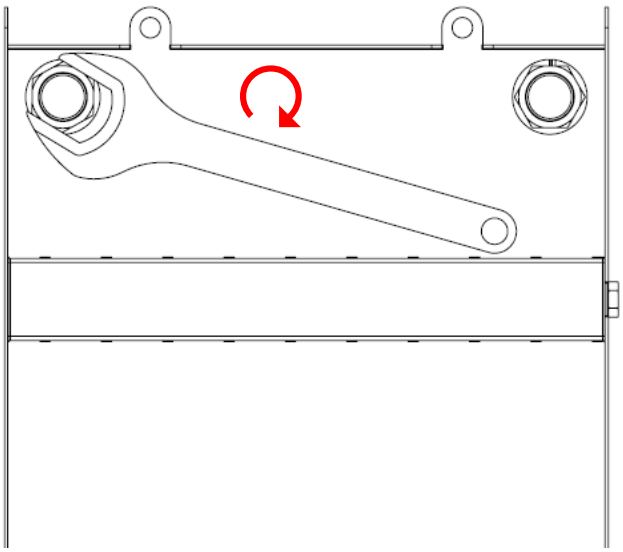

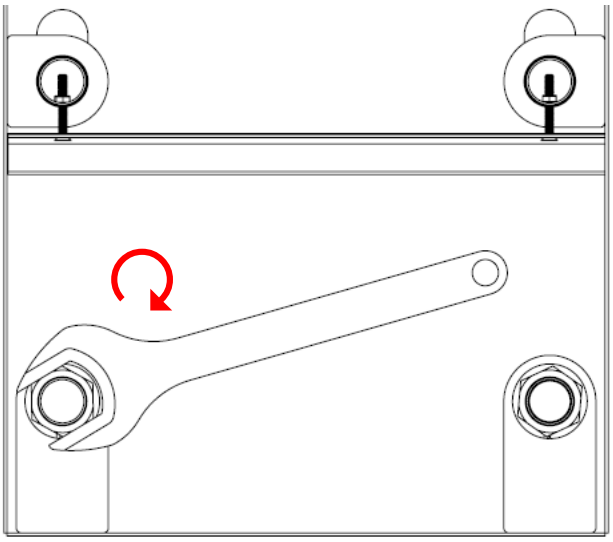

MICRODYNNADIR
A MANN+HUMMEL Company

Step 52: Install blind plug

- Tighten the ¾” blind plug firmly on the side of permeate channel using a 12 mm Allen key.

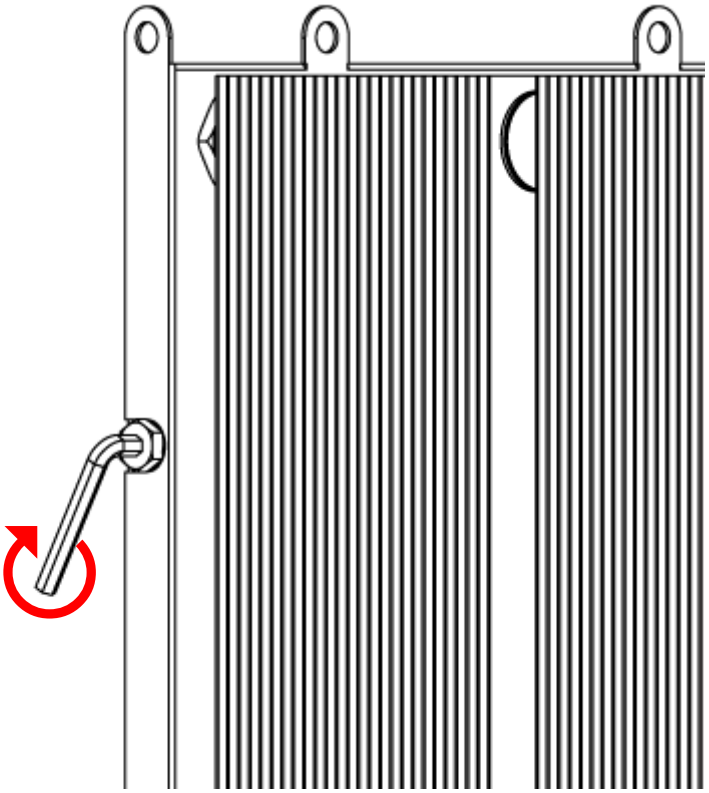

MICRODYNNADIR
A MANN+HUMMEL Company

Contact

MICRODYNNADIR
A MANN+HUMMEL Company

Europe
Germany: +49 611 962 6001
Italy: +39 0721 1796201
info@microdyn-nadir.com

Américas
USA: +1 805 964 8003
Brazil: +55 11 3378 7500
info@microdyn-nadir.com

Asia
China: +86 592 677 5500
Singapore: +65 6457 7533
infochina@microdyn-nadir.cn

MICRODYNNADIR
A MANN+HUMMEL Company